Implementation of VOC Control Guideline in Pharmaceutical Industry-A Review

Prathmesh Patel[1], Prof. S.M. Usman[2]
[1] Student of Environmental Engineering Department, Swarrnim Institute of Technology, Swarnim University, Gandhinagar, Gujarat,
[2]Assistant Professor, Department of Environment Engineering, Swarrnim Institute of Technology, Swarnim University, Gandhinagar, Gujarat.

Abstract
Volatile Organic Compounds (VOCs) are among the most toxic chemicals which are detrimental to humans and environment. There is a significant need of fully satisfactory method for removal of VOCs. There are several methods including physical, chemical and biological treatments available to remove VOCs by either recovery or destruction. The aim of the present study is to summarize the available methods for VOC removal; trying to find a promising method among the available techniques. A wide range of VOCs can be treated biologically in which it offers advantages over more traditional processes including lower operating and capital costs and a smaller carbon footprint. However, due to a complex nature and diversity of VOCs it is hard to find a simple and promising method. Treatment still requires more research to solve the associate problems with available VOC elimination techniques.
Keyword: VOC, Removal Techniques, Measurement Technique

Introduction

A volatile organic compound (VOC) is defined as "any organic compound which participates in atmospheric photo-chemical reactions(Note: These compounds may contain oxygen, Nitrogen and other elements but specifically excluded are carbon monoxide, carbon dioxide, carbonic acid, metallic carbides and carbonate salts). Odour can be defined as the “perception of smell” or in scientific terms as “a sensation resulting from the reception of stimulus by the olfactory sensory system”. Odour is a distinctive smell, especially an unpleasant one.Many pharmaceutical and chemical manufacturers use VOC's or solvents in their production processes. They are often used both as the medium in which reactions take place, as well as in the purification of the final product.Solvents can serve one or more functions in pharmaceutical manufacture. They provide molecules to build some drugs.For other drugs, solvents are used for extraction and purification. Solvents also can provide a reaction medium. Solvents work in a variety of ways to contribute to many of the medicines people use today. As helpers in the formulation of many health care products such as penicillin, aspirin, cough syrup, and topical ointments, solvents play an important role in the medicine cabinet. But it is also the reason for emission of VOC’s in atmosphere.VOCs play a significant role in the formation of ozone and fine particulates in the atmosphere. Under sunlight, VOCs react with nitrogen oxides emitted mainly from vehicles, power plants and industrial activities to form ozone, which in turn helps the formation of fine particulates. The accumulation of ozone, fine particulates and other gaseous pollutants results in smog that reduces visibility. Mostly All types of industries released VOC into the air during manufacture & other associated activities thus Control of VOC is the most serious challenge for Indian Chemical Industry. Chemicals add value to company if, they are retained with in the plants equipment and converted to useful products.

Volatile Organic Compounds (VOCs): Sources and Measurement Technique

Synthesized pharmaceuticals are normally manufactured in a series of batch operations according to the following sequence: (a) reaction (sometimes more than one), (b) product separation, (c) purification, and (d) drying.Each operation of the series may be a source of VOC emissions. The magnitude of emissions varies widely within and among operation categories and depends on the amount and type of VOC used, the type of equipment performing the operation, and the frequency of performing the operation. The wide variation prevents calculating typical emission rates for each operation; however, an approximate ranking of emission sources has been established and is presented as (a)Dryers, (b) Reactors, (c) Distillation unit, (d) Storage and transfer, (e) Filters, (f) Extractors, (g) Centrifuges and (h)Crystallizers, in order of decreasing emission significance. Among this dryers, reactors, distillation unit & Storage and transfer generally will account for the majority of emissions from a plant.

Applicable controls for all the above emission sources except storage and transfer are: condensers, scrubbers, and carbon absorbers. Incinerators are expected to have limited application but may be useful for certain situations. Storage and transfer emissions can be controlled by vapour return lines, vent condensers, conservation vents, vent scrubbers, pressure tanks, and carbon adsorbers. Floating roofs may be feasible controls for large, vertical storage tanks.

Measurement Techniques of VOC

Measurements of VOCs are usually subdivided into a sampling and an analytical step, of which the sampling is carried out in the indoor environment. The method of enrichment of VOCs on solid sorbents with subsequent thermal or liquid desorption is widespread. A gas chromatograph coupled to a mass spectrometer or another detection device is required for proper identification of individual VOCs. Some of the VOCs, e.g. low molecular weight aldehydes, are preferably derivative during or after sampling

and the derivatives are analysed with gas chromatography (GC) or high performance liquid chromatography (HPLC). In this chapter only the sampling and essentials of desorption techniques are addressed. For information on analytical techniques including selection of chromatographic columns, detection techniques, etc., the reader is referred to textbooks of environmental organic analysis.

Available techniques/technologies for VOCs control

There are many different techniques available to control VOCs emissions. These techniques are basically classified into two different groups: (i) process and equipment modification and (ii) add-on-control techniques. In the first group, control of VOCs emissions are achieved by modifying the process equipment, raw material, and/or change of process, while in the other class an additional control method has to be adopted to regulate emissions. Though the former is the most effective and efficient method, its applicability is limited, as usually it is not possible to modify the process and/or the equipment.

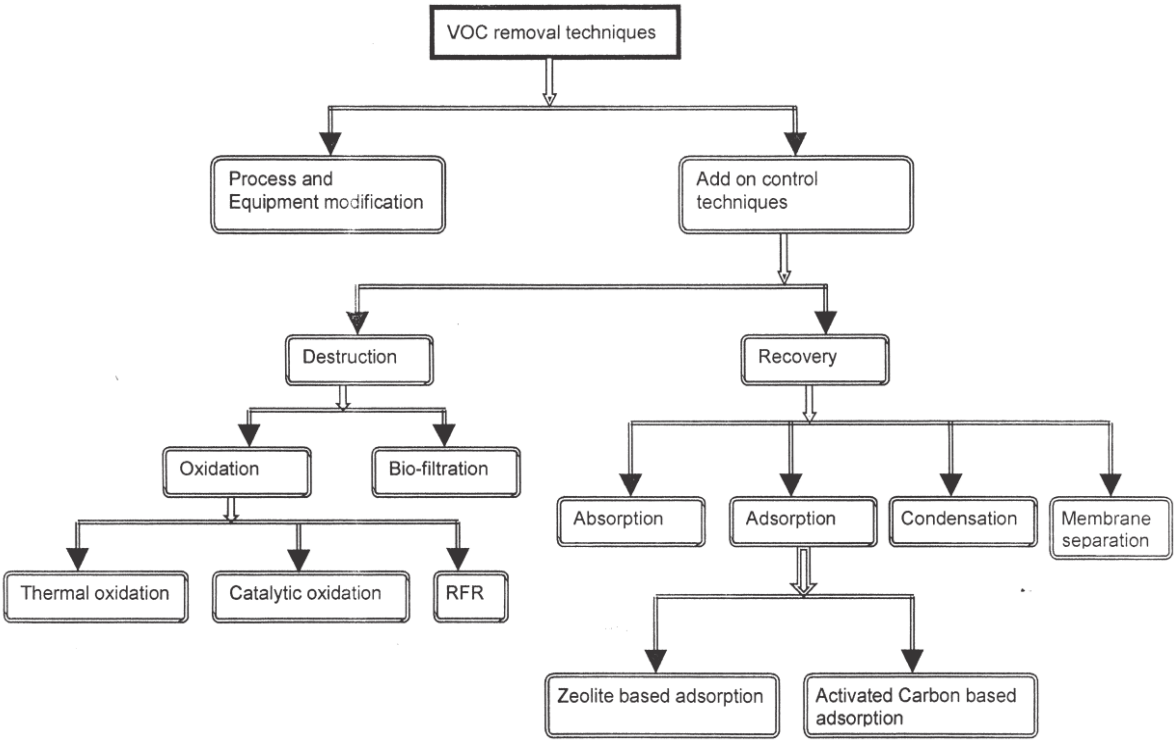

Fig. 1. Classification of VOC control techniques.

1. Process and equipment modification

Process and equipment modifications are usually the most preferred alternative for reducing emissions. Modifications include the substitution of raw materials to reduce VOCs input to the process, changes in operating conditions to minimise the formation or volatilisation of VOCs and the modification of equipment to reduce opportunities for escape of VOCs into the environment. The first two mechanisms vary with the process being addressed and are not further discussed here. Equipment modification can take many forms, but the objective is always to prevent the escape of VOCs. VOCs can be emitted through open vessel tops, vents, or leaks at flanges or valves, or they may be the result of process conditions. The starting point is the vessel or structure in which the operation takes place. Vessels can be capped or equipped with rupture disks or pressure/vacuum vent caps to contain vapour emissions. Monitoring and repair programs can be instituted to consistently reduce emissions due to leaks from valves, pumps, and process piping connections in order toreduce emissions. Similarly, process enclosures can be designed to reduce emissions. By enclosing the source, a positive means of collecting the emissions can be provided.

2. Add-on-control techniques

Add-on control techniques are broadly classified into two types: destruction and recovery, details of which are presented in subsequent sections.

Destruction of VOCs

In this step, VOCs are destroyed by different types of oxidation such as thermal and catalytic, and digestion of VOCs under aerobic conditions by microbes (Bio-filtration).

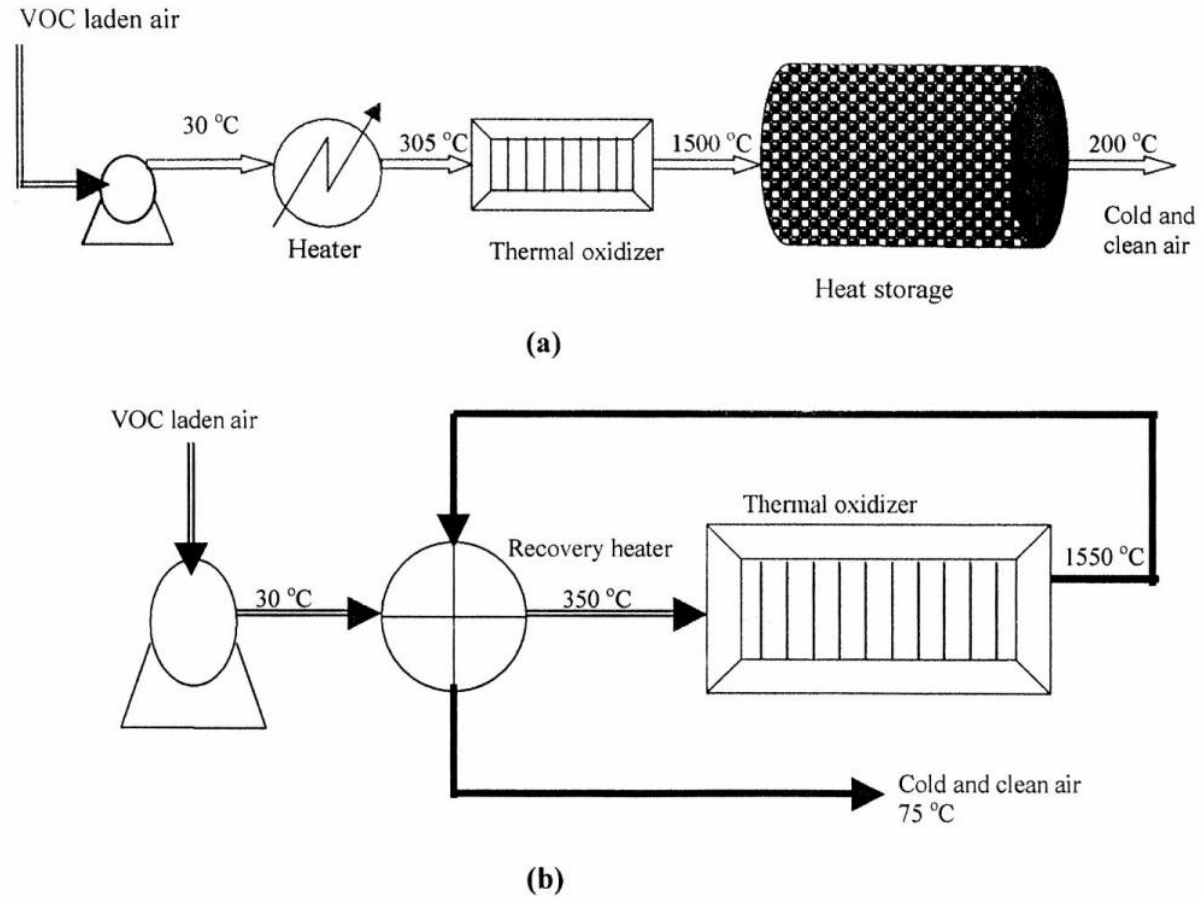

Fig. 2. Schemes of thermal oxidation. (a) Regenerative thermal oxidation; (b) recuperative thermal oxidation.

Emission Control Technique: For this technique Flash Point, Flammable limit, Vapor Pressure, Density of Vapor, Threshold Limit Value, Auto Ignition Temperature, Static Charge are the major parameters to be considered for deciding type of storage

Basic Control Technique:

- Unloading of tankers by nitrogen pressure or pumps with double mechanical seals.
- Stand by pumps for isolation of leaking pump and ease of preventive maintenance
- Completely closed operation
- Breather valves to all storage tanks
- Condensers for volatile solvents
- Nitrogen blanketing and flame arrestors for flammable solvents

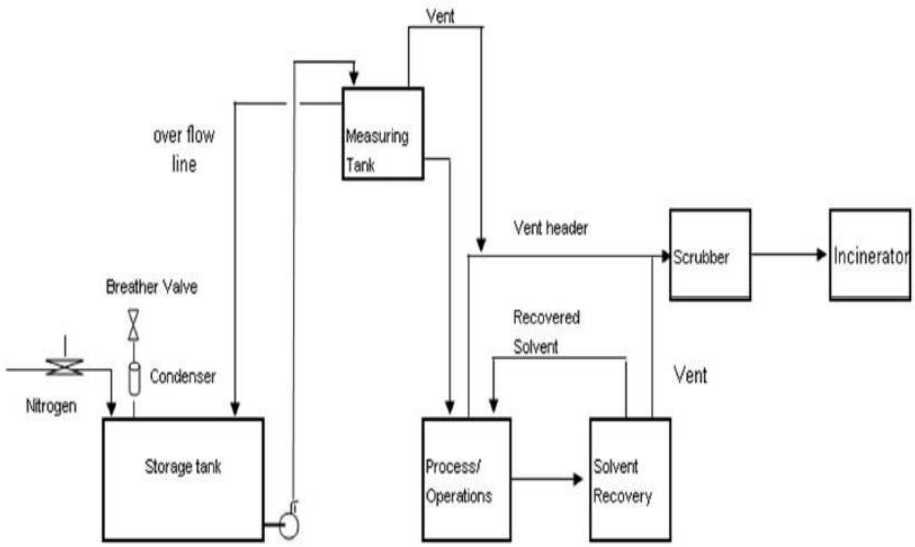

Figure 2: Solvent handling facility

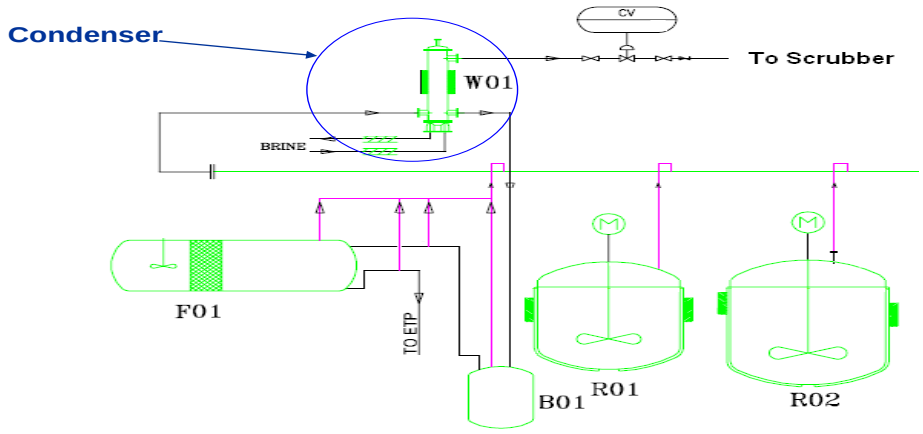

Figure 3: Condenser system in vent line

- Extra condenser at vent line to prevent solvent loss (In case of volatile)

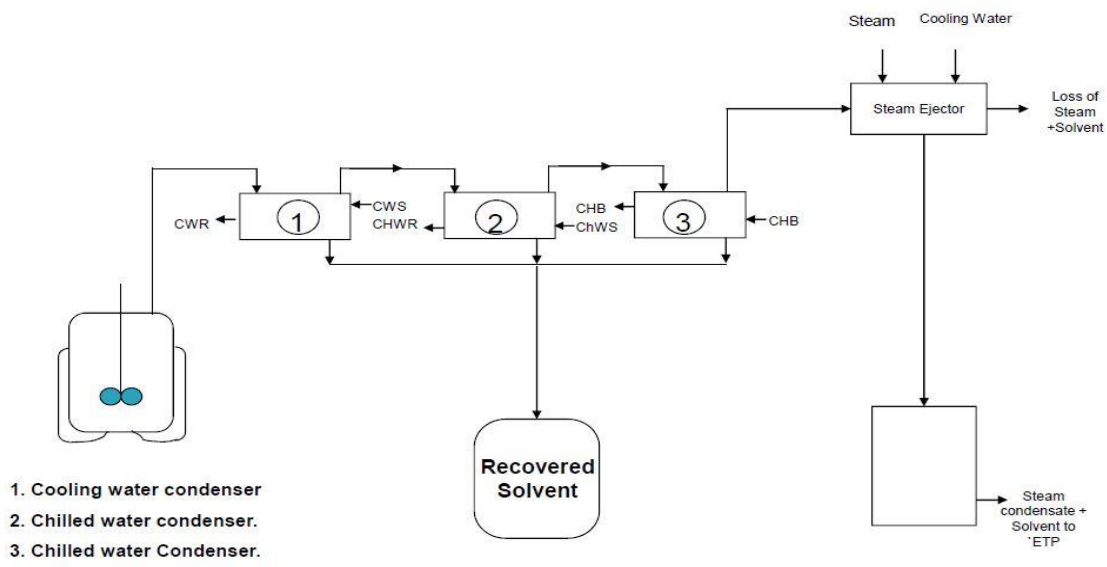

Figure 4 Vacuum distillation

- Three stage condenser i.e. cooling water condenser followed by two stage chilled water condenser for maximized recovery

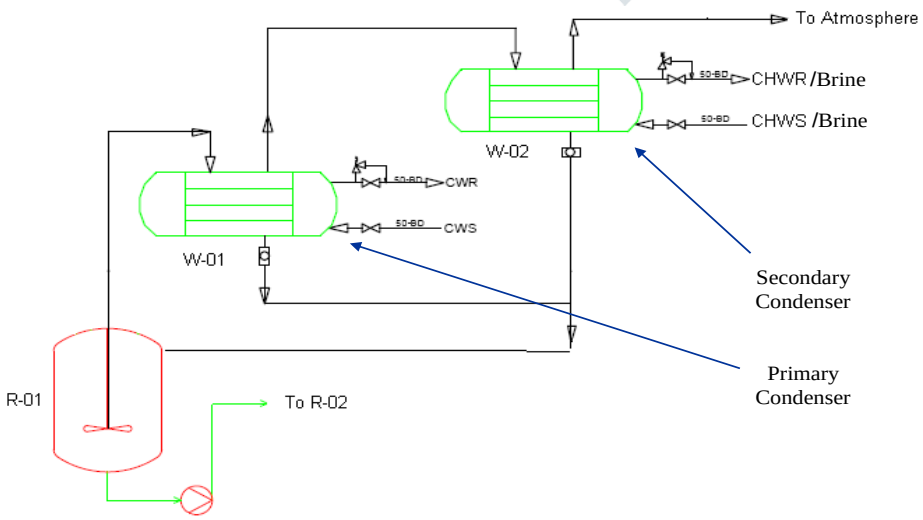

Figure 5: Two stage condenser in distillation process for maximized recovery

Emission Control technique in vacuum distillation

- ✓ Chemicals from exhaust of vacuum system can be recovered completely if there is no motive fluid (steam, water) in the vacuum system, means emission can be control further by putting dry vacuum pump as there is,
- ✓ No Motive fluid
- ✓ Elimination of steam usage, cost of utility is very low. Motor of 7.5 to 10 kw is enough.
- ✓ Solvent from exhaust can be recovered & recycled (No contamination).
- ✓ Solvent emission to atmosphere is almost nil.
- ✓ Higher capacity & vacuum achievable if used in combination with mechanical booster(s) and / or vapor boosters.
- ✓ Secondary condensers are used in case of volatile solvents where chilled water or chilled brine is used as a coolant.
- ✓ Consistent flow of utilities shall be ensured.
- ✓ Vacuum system shall have barometric legs.
- ✓ Do not expose the receiver to vacuum.
- ✓ Instrumentation to prevent/control accidental/more release of solvent into the atmosphere
- ✓ Instrumentation to prevent loss of solvent vapours (High vacuum trip with steam block
- ✓ valve/feed block valve as the case may be)
- ✓ Annual cleaning of condensers to remove scaling (shutdown activity)
- ✓ Vent of ejectors and hot well to be connected to Scrubber/ Incinerator.

Conclusion

- ➢ Many VOCs are classified by the U.S. EPA as 'air toxics.' Toxic air pollutants are defined as those pollutants that cause or may cause cancer or other serious health effects.
- ➢ Control of VOC's is the main challenge in today's scenario for both Industries as well as for regulators and implementing VOC's control guideline is win-win situation from the both prospects, i.e. industries point of view as well as from regulator point of view.
- ➢ Based on data i.e. before & after implantation of various suitable technologies (VOC's control guideline), it seems that, industries can get lot of financial benefit by properly implementing VOC's control guideline as it directly reduces consumption of low volatile (solvent) and cost of production get reduced. It's also reduced general public pressure on regulator & industries due the improvement in ambient air quality.
- ➢ Though the existing VOC guideline is effective & technologies are convincing, there is always scope of further improvement & looking to the present scenario, we should always explore possibility for process change by using high volatile organic compound instead of low volatile organic compound.
- ➢ As per survey done by us in Ankleshwar cluster VOCs emission vary as per solvent usage and VOC compounds of industries. And for that control measures have taken by industries and after that according to data obtained from CPCB Site for Ankleshwar cluster, we found reduction in VOC emission.
- ➢ For more effective results there shall be need to improve in existing guidelines.
- ➢ To control VOC emission from source some implementation should be done in existing guideline of VOC emission control techniques.
- ➢ Reduction of VOCs form emission source.
- ➢ Implementation in storage or process facility provided.
- ➢ Control measures should be provided at the source of emission.

References

1. VOC emission from an important industrial park in Tianjin, China
2. Characterization and assessment of volatile organic compounds (VOCs) emissions from typical industries
3. Source apportionment analysis of airborne VOCs using positive matrix factorization in industrial and urban areas in Thailand
4. Volatile Organic Compounds in India: Concentration and Sources
5. Removal of Volatile Organic Compounds from polluted air
6. Source apportionment of VOCs and their impacts on surface ozone in an industry city of Baoji, Northwestern China
7. From Pollution Control to Combined Heat and Power Technology Systems
8. Volatile Organic Compounds Removal Methods: A Review
9. Volatile organic compounds and their measurements in the troposphere
10. Guidance on VOC Substitution and Reduction for Activities Covered by the VOC Solvents Emissions Directive (Directive 1999/13/EC)
11. Recent Development of Catalysts for Removal of Volatile Organic Compounds in Flue Gas by Combustion: A Review
12. A sampler for atmospheric volatile organic compounds by copter unmanned aerial vehicles
13. Removal of Indoor Volatile Organic Compounds via Photocatalytic Oxidation: A Short Review and Prospect
14. Indoor VOCs: Source characteristics and air cleaning
15. Volatile organic compounds (vocs) in the air, their importance and measurements
16. OAQPS Guideline series: Control of volatile organic emissions from manufacture of synthesized pharmaceutical products

17. Control Techniques for Volatile Organic Compound Emission from Stationary Sources
18. GPCB Guideline for VOC & Emission control in chemical industries
19. Air sampling and analysis method for volatile organic compounds (VOCs) related to field-scale mortality composting operations. J. Agr.Food Chem. 57, 5658–5664.
20. U.S. Environmental Protection Agency. Compendium Method TO-17, Determination of volatile organic compounds (VOCs) in ambient air using active sampling onto sorbent tubes. In: Compendium of methods for the determination of toxic organic compounds in ambient air. 2nd ed. Cincinnati: Center for Environmental Research Information, Office of Research and Development; 1999.Google Scholar
21. EN 16516. Construction products: assessment of release of dangerous substances determination of emissions into indoor air. Berlin: BeuthVerlag; 2018.Google Scholar
22. A sampler for atmospheric volatile organic compounds by copter unmanned aerial vehicles by Karena A. McKinney , DanielWang, Jianhuai Ye , Jean-Baptiste de Fouchier , Patricia C. Guimarães , Carla E. Batista, Rodrigo A. F. Souza, Eliane G. Alves, DasaGu , Alex B. Guenther, and Scot T. Martin
23. Volatile Organic Compounds (Vocs) In The Air, Their Importance And Measurements by Chaithanya D. Jain, Harish S. Gadhavi, Lokesh K. Sahu and A. Jayaraman
24. Atmospheric Emission Characteristics and Control Policies of Anthropogenic VOCs from Industrial Sources in Yangtze River Delta Region, China by ChenghangZheng, JialiShen, Yongxin Zhang, Xinbo Zhu, Xuecheng Wu, Linghong Chen, Xiang Gao
25. Characteristics and Uncertainty of Industrial VOCs Emissions in China by Xuecheng Wu, Weiwei Huang, Yongxin Zhang, ChenghangZheng, Xiao Jiang, Xiang Gao, Kefa Cen
26. Air ionization as a control technology for off-gas emissions of volatile organic compounds by Ki-Hyun Kim, Jan E. Szulejko, Pawan Kumar, Eilhann E. Kwon, Adedeji A. Adelodun, Police Anil Kumar Reddy
27. Bio filtration as an air pollution control technology for volatile organic compounds by AM Zakareia, MA Zytoon, FM Nofal, AO Farag
28. Novel off-Gas Treatment Technology To Remove Volatile Organic Compounds with High Concentration by Hong Sui, Tao Zhang, Jixing Cui, Xiqing Li, John Crittenden, Xingang Li and Lin He
29. Recent Development of Catalysts for Removal of Volatile Organic Compounds in Flue Gas by Combustion by Marco Tomatis, Hong-HuiXu, Jun He and Xiao-Dong Zhang.
30. Atmospheric Emission Characteristics and Control Policies of Anthropogenic VOCs from Industrial Sources in Yangtze River Delta Region, China by ChenghangZheng, JialiShen, Yongxin Zhang, Xinbo Zhu, Xuecheng Wu, Linghong Chen, Xiang Gao
31. Characteristics and Uncertainty of Industrial VOCs Emissions in China by Xuecheng Wu, Weiwei Huang, Yongxin Zhang, ChenghangZheng, Xiao Jiang, Xiang Gao, Kefa Cen
32. Air ionization as a control technology for off-gas emissions of volatile organic compounds by Ki-Hyun Kim, Jan E. Szulejko, Pawan Kumar, Eilhann E. Kwon, Adedeji A. Adelodun, Police Anil Kumar Reddy
33. Bio filtration as an air pollution control technology for volatile organic compounds by AM Zakareia, MA Zytoon, FM Nofal, AO Farag
34. Novel off-Gas Treatment Technology To Remove Volatile Organic Compounds with High Concentration by Hong Sui, Tao Zhang, Jixing Cui, Xiqing Li, John Crittenden, Xingang Li and Lin He
35. Recent Development of Catalysts for Removal of Volatile Organic Compounds in Flue Gas by Combustion by Marco Tomatis, Hong-HuiXu, Jun He and Xiao-Dong Zhang
36. Volatile Organic Compounds: Sampling Methods and Their Worldwide Profile in Ambient Air, Anuj Kumar & Ivan Víden
37. Controlling Volatile Organic Compound Emissions from Industrial Sources in New Hampshire
38. OAQPS Guideline Series-Control of Volatile Organic Emissions from Manufacture of Synthesized Pharmaceutical Products
39. PHARMACEUTICAL INDUSTRY, Keith D. Tait
40. Chemical hazards and safety management in pharmaceutical industry O. G. Bhusnure, R. B. Dongare, S. B. Gholve, P. S. Giram
41. Guidance on VOC Substitution and Reduction for Activities Covered by the VOC Solvents Emissions Directive