Grid Connected Solar PV System for Street Light

[1]Naushaba Parween, [2]Mrs Taru Tevatia

[1]M.Tech Al Falah University Faridabad India., [2]Assistant Professor Department of EEE Al Falah University Faridabad India

Abstract- Photovoltaic (PV) energy includes a quick growing annual rate and is quickly changing into a very important a part of the energy balance in most regions and power systems. This paper aims to check the results of connecting a PV system to the grid through simulation of the system in Pv Syst software .In this paper, the technique of deciding and calculation the most parameters of series electrical phenomenon structure and out doors street lighting in keeping with illumination necessities are planned. The doable structure of reversible device for integration with low voltage facility has been advised. The fundamental aim is to use the utmost generated power, the generated power throughout day time is transmitted to the connected grid whereas at the night it use in street light.

***Key words*-Grid connected PV, Pv Syst Software, Street light, Inverter.**

1. INTRODUCTION

The main goal of this paper is to develop calculation technique of series electrical phenomenon systems for integration with street lighting per balance of consumption/generation of energy and investigate the most operation modes of device yet. The most system necessities square measure the most simplicity and low price, yet as magnetic force compatibility with low AC voltage. Star electrical phenomenon arrays square measure created by series, parallel and mixed connections of star panels to succeed in a necessary output voltage and power.

Grid connected PV systems within the world account for concerning ninety nine of the put in capability compared to square alone the systems, that use batteries. Battery-less grid connected PV square measure price effective and need less maintenance. Batteries aren't required for grid connected PV, because the power generated is uploaded to the grid for transmission mechanism, distribution and consumption. This eases the burden on alternative sources provision power to the grid.

In this paper, the impacts of connecting PV system to grid square measure studied. Further, the Performance quantitative relation of a typical grid connected PV system in an exceedingly specific zone is evaluated.

2. SERIES PHOTOVOLTAIC SYSTEM (SPHS) INTEGRATED WITH STREET LIGHTING

Based on existing distributed electrical phenomenon systems the generalized structure of the electrical phenomenon systems integrated with street lighting, which incorporates the subsequent main parts, are planned (see. Fig. 2): star panels (PV1, PV2 ... PVn); individual matching DC / DC convertor while not galvanic isolation that gives the utmost wall plug pursuit (MPPT) of every star panel; light-emitting diode Street Lighting Fixtures; DC line; grid connected DC / AC power electrical converter, that provides communication with a low-tension AC facility.

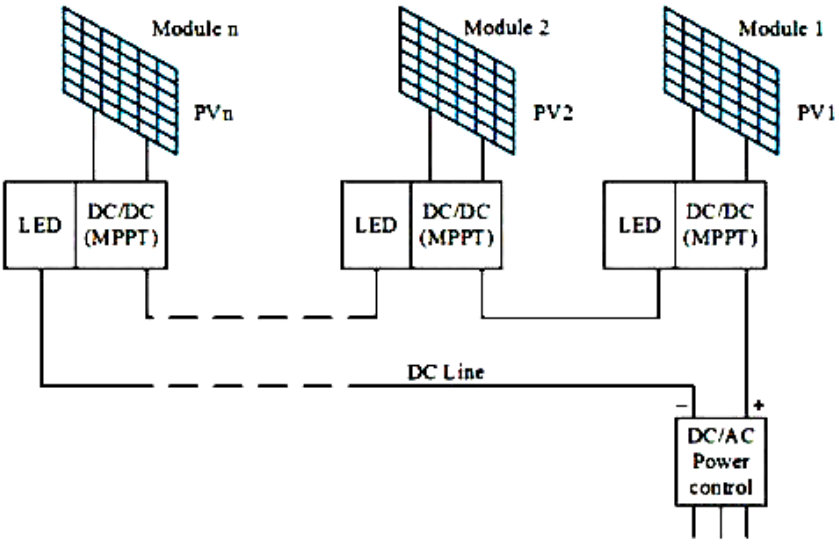

Fig 2:General Structure of Photovoltaic System

Integration of electrical phenomenon systems to street lighting is advisably provided by applying a linear arrangement of star panels on the streets. At a similar time, the series association includes a star panels, individual matching converters and diode lamps.

3. CONVRTER

The modern trend in circuit style for distributed electrical phenomenon systems is to cut back the quantity of modules that served by individual matching DC/DC converters that offer a most electrical outlet trailing (MPPT) (see. Fig. 3). It will considerably scale back the negative impact of shading panels and increase the potency of the total system by optimizing of operational conditions of every electrical device.

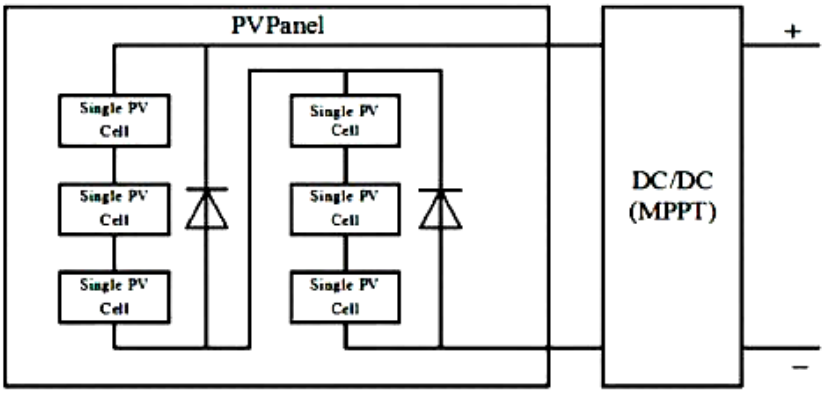

Fig.3.1.Solar panel with DC/DC micro converter

Thus, the individual matching converters resolve the problem of partial shadowing of solar panels and optimize the performance of each solar panel.

4. LOAD PROFILE OF THE STREET LIGHT

The street light amount and capability additionally as calculable monthly and yearly total consumption is given below in table. It ought to be noted that the street lamp consumption isn't constant monthly, it's will increase throughout winter season and reduces throughout summer. Therefore, a median twelve hours is chosen as in operation length of street lamp.

Number of Streetlight	185
Rating of each light	30 W
Total Load	5.55 kW
Operating Duration	12 hrs/day
Energy Consumption/Day	66.6 kWh
Yearly Consumption	24.3 MWh

5. GRID CONNECTED SOLAR PV SYSTEM

A grid connected solar photovoltaic system is meant victimization PV Syst software package. The operating method of this grid connected PV system is that the complete generated power throughout the total day is transmitted to the connected grid whereas in the night, the lamp consumes power from that grid. a straightforward grid connected system is shown in figure

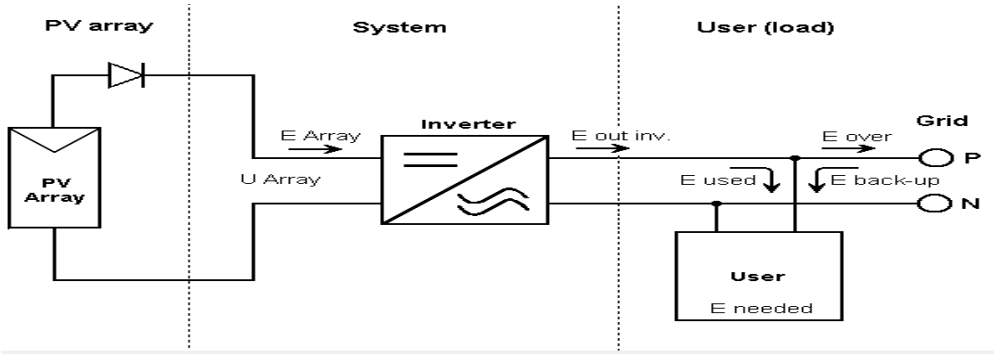

Fig.5.1. Grid connected solar PV system

6. SYSTEM ORIENTATIONS

System orientation and inclination of the solar PV panel for the planned location is shown in figure

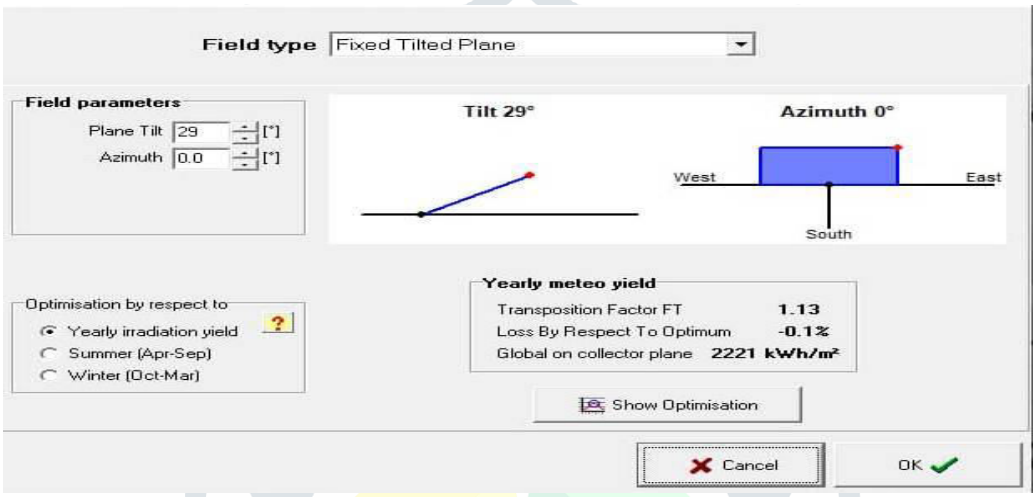

Fig 6.1 Orientations angle

Tilt angle of the PV panel is chosen is chosen rather than outlined location latitude angle twenty eight.6^0, as a result of the system generates a lot of power at tilt angle 32^0, because the panel receives a lot of solar irradiation at this angle

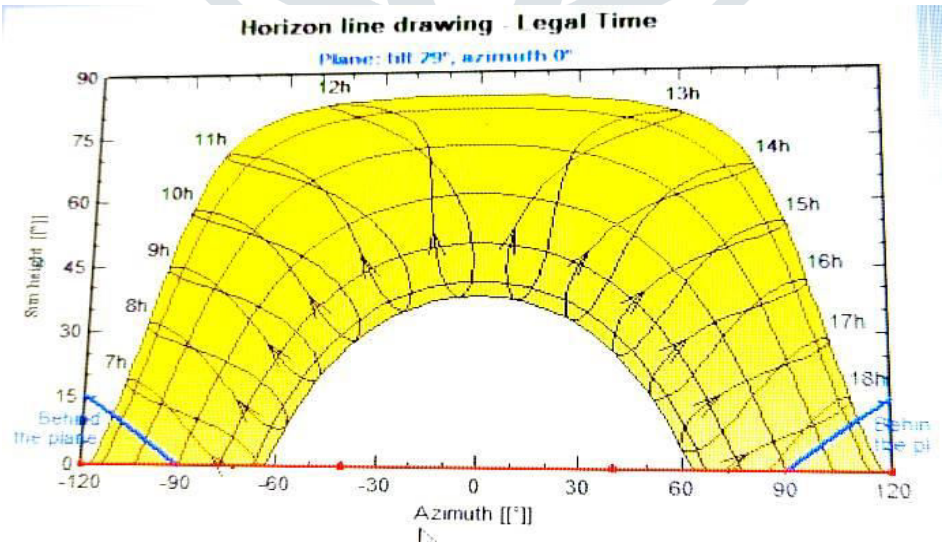

Fig 6.2 Sunlight versus azimuth angle with different change in Month

7. DESIGNING OF SOLAR PV SYSTEM

System planning and simulation of 13.40 KWp power solar PV system is perform by victimization PV syst software package version 6.70. It's attainable to own preliminary and additionally as post analysis take a look at information for the possible power generation. The whole system performance and potency of every systems of plant square measure evaluated by getting into the specifications of a specific style. The system in step with the specifications of all elements represented in methodology.

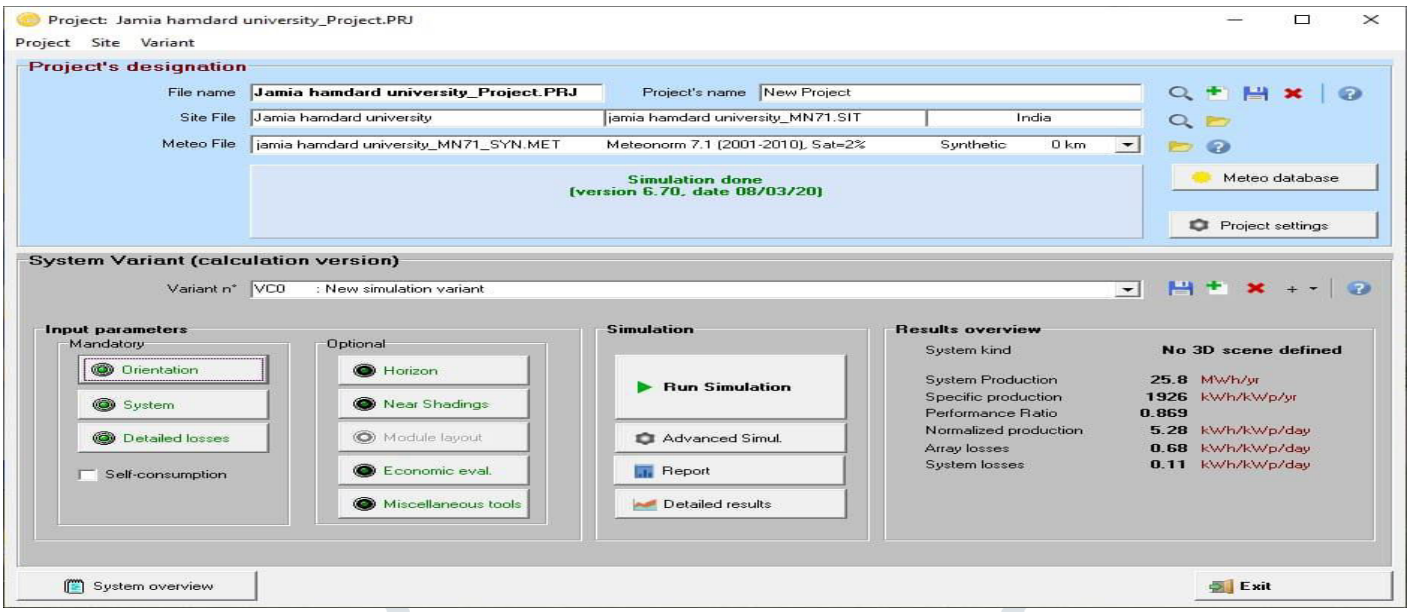

Fig.7.1. Simulation in PVsyst software

the system coming up with, rating of photovoltaic module, inverter and array coming up with for13.40KWp solar PV system.

8. RESULTS

8.1. Performance Ratio

The performance ratio of this system is 86.86%, means only 13.14% energy generated through the PV panels is lost in the system losses.

Normalized productions (Per installed KWp) Nominal power 13.40 KWp

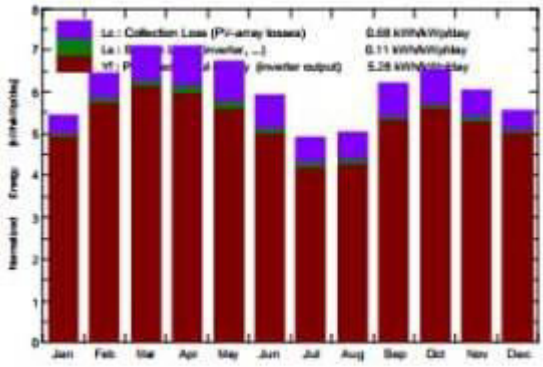

Performance Ratio PR

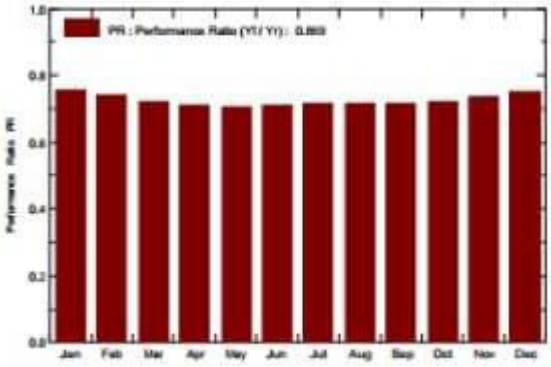

8.2 Daily Input Out Diagram

Figure shows a graph between energy injected into grid versus world incident in collector plane. The output of PV module is relying upon the worldwide solar irradiation, once solar irradiation on the PV panel will increase, a lot of power injected into the grid

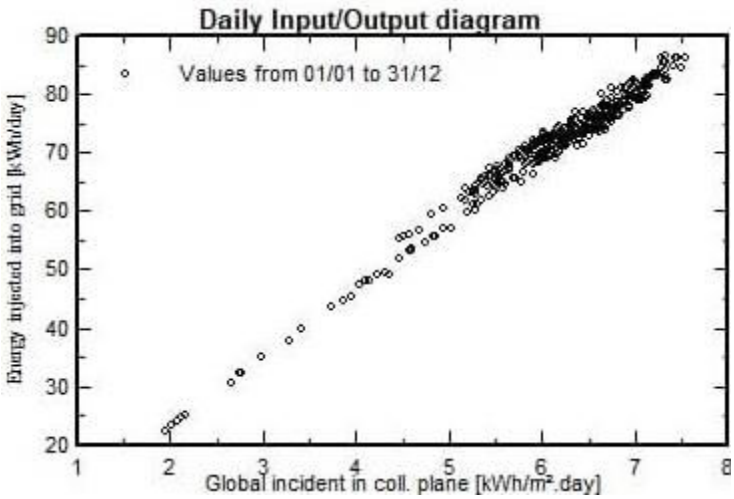

8. CONCLUSION

Photovoltaic Systems have developed into a mature technology used for thought electricity generation. Solar photo voltaic wattage system is powered by the sun, provides a reliable, safe, noise-free, emission-free electricity, Friendly to use and doesn't need re fuelling. Conjointly helps to cut back the consumption of fossil fuels in power plants, Pollution and gas emissions cause the climate harm. The most advantage of this technique is that there's no have to be compelled to store the generated power. The projected series photovoltaic system doesn't contain galvanic isolation; as a result, the system must become an occasional price application for outside LED lighting; The studies distributed can facilitate PV power generators and utilities the problems to be studied for a grid connected PV system.

9. REFERENCES

[1] "State wise installed solar power capacity" (PDF), Ministry of New and Renewable Energy, Govt. of India. 1 March 2016 Retrieved 24 March 2016.

[2] "Grid Integration of Distributed Solar Photovoltaics (PV) in India," A Prayas (Energy Group) Report, July 2014.

[3] Ali, Farooq, Rehman, Awais, Jamil & Noman, "Design Considerations of Stand-alone Solar Photovoltaic Systems", in International Conference on Computing, Electronic and Electrical Engg. (ICE Cube), Quetta, Pakistan, pp. 1-6, (12-13 Nov. 2018).

[4] Ahsan, Javed, Rana & Zeeshan, "Design and cost analysis of 1kW photovoltaic system based on actual performance in Indian scenario", Perspectives in Science, vol. 8, pp. 642-644, (2016)..

[5] Chandra, Singh, kannojiya & Kesari, "Solar Energy a Path to India's Prosperity", Journal of The Institute of Engineers India, Series C, pp. 1-8, (2018).

[6] Devesh U. Sarkar, Harshit S. Dalvi," Modeling and Designing of Solar Photovoltaic System with 3 Phase Grid Connected Inverter", 2nd International Conference for Convergence in Technology, 2017.