Long Range and Self-Powered IoT Device for Agriculture Based on Multi-hop Topology

Anchla Rajput[1]
[1]M.tech scholar, IES College of Technology, Bhopal (M.P.)
Mr. Anshul Sarawagi[2]
[2]Assistant Professor, IES College of Technology, Bhopal (M.P.)

Abstract - The Internet of Things (IoT) refers to electronic device communications, one of them is the wireless sensor network (WSN). Battery life is the main challenge for WSN. Battery life refers to the maximum time until one node not work. This article presents the prototype design and testing of a self-powered IoT devices for use in precision agriculture. This study proposed to increase the battery life of WSN by applying solar energy harvesting technology. The system consists of several nodes equipped with solar cell and energy harvester. The system uses sleep mode with certain active intervals to save power.

The custom multi-hop protocol provides energy efficient communication from any device in a wireless sensor network. The sensor data is transmitted to a gateway, which then forwards it to a local server or cloud service, where the data can be analyzed to optimize the production in agriculture.

The preferred topologies and protocols in multi-hop WSNs have a significant impact on energy consumption.

In this paper, experimental validation of the self-powered WSN for indoor monitoring proposed on multi-hop topology. The choice of solar cell type, microcontroller, and sensor are the main factors for device development. The harvested energy must be above the WSN energy requirements.

Keywords- Multi-hop WSN, Topology, Wireless sensor networks, IoT, energy harvesting, self-powered IoT, star topology and multi-hop topology.

1. INTRODUCTION:

Internet of Things (IoT) is networking of devices with embedded electronics, software, sensors and actuators which enable seamless data exchange among the connected devices. IoT applications span across wide areas which include smart cities, smart homes, transportation, industrial automation, marketing, schools, vehicles, agriculture, healthcare services and emergency services. Recent developments in semiconductor technology, microcircuit (IC) technology and advancements in wireless technology enables the development of several applications associated with wireless embedded systems and Internet of Things (IoT) devices.

It is expected that approx. 60 billion IoT devices are going to be connected by 2025. In majority of the WSNs and IoT applications, devices are powered by batteries with limited life time, starting from hours to years. When these batteries get discharged, they need to be recharged or replaced. For devices in remote locations and harsh environments, it may not be possible to either recharge or replace the batteries.

Energy harvesting from ambient sources could also be a viable solution to beat these issues, especially for outdoor applications, however, it imposes many challenges in indoor applications, because the available ambient energy is drastically reduced. This paper presents an answer for an IoT device which is self powered through energy harvesting from ambient sources for indoor applications.

1.1 IOT DEVICE FOR AGRICULTURE ON MULTI-HOP TOPOLOGY

Normally, during a wireless IoT network, trade-offs must be made regarding energy consumption, bandwidth and transmission range as increased range typically leads to higher energy consumption. On the opposite hand, a better bandwidth leads to a shorter range. IoT nodes can also be used to implement precision farming techniques.

.Precision farming focuses on measuring soil properties and use the measurements to optimize soil sampling and management schemes. In aquaponics, IoT devices are often deployed for optimizing the expansion of both fish and plants by measuring and controlling values such as dissolved oxygen percentage and water temperature.

To optimize the critical parameters in agriculture and aquaponics, a totally self-powered, long-range IoT device with a custom ultra-low power (ULP) multi-hop protocol is designed and implemented.

1.2 SYSTEM LEVEL DESIGN

Each of the modules is described in greater detail within the following section.

1.2.1 Long-range self-powered IoT device

The nRF52840 is a System on Chip (SoC) developed by Nordic Semiconductor for ultra-low power (ULP) wireless applications with Bluetooth 5 support. It uses a 32-bit Cortex- M4F processor.

1.2.2 Energy harvesting and power management

In order to power the wireless sensor network (WSN), an energy harvesting (EH) module is designed. Power available from various sources varies drastically with changing conditions.

1.2.2.a Photovoltaic energy harvesting

Sunlight has higher intensity and provides a wider spectrum than what is found in artificial lightning, as shown in Fig.1. Fluorescent light, illustrated as blue, covers a very narrow spectrum, while LED light covers a broader spectrum, but peaks at a shorter wavelength.

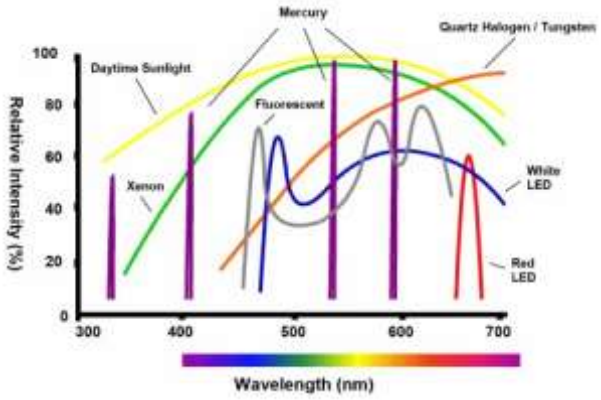

Fig. 1 Spectrum of different light sources

2. LITERATURE SURVEY:

A lot of study uses solar energy harvesting technology to develop self-powered WSN. The literature related to the research topic has been reviewed for last twenty years in order to find out work carried out by various researchers. There are many systems for long range and self- powered devices designed as commercial products or experimental research platforms.

M.N. Mamatha ; S.N. Namratha et al [1] *says auto feeder place major role in this system used to maintain the growth and survival rates. Filter systems used to remove the amount of waste materials and breakdown products from the water. The set point will be the desired water level, the monitored temperature in fish tank, the monitored temperature at plant area and the desired amount of food.*

Rodrigo S et al [2] *proposed an automated solar powered Aquaponics system that is cost effective and more ideal for the society. The system designed consists of four modules:*
1) water recirculation system
2)aquaponics control and monitoring system using Arduino microcontroller

D. Arı, M. Çıbuk, and F. Ağgün et al [3] *says multi-hop WSN structure is preferred for large-scale WSNs and that consist of multiple sensor and CN. As in the networks sensor node count increase, hop count increase as well.*

R. A. Kjellby et al [4] *proposed that IoT devices can be deployed in large scale and placed anywhere as long as they are in range of a gateway, and as long as there is sufficient light levels for the solar panel, such as indoor lights. A complete IoT device is designed, prototyped and tested. The IoT device can potentially last for more than 5 months (transmission interval of 30 seconds) on the coin cell battery (capacity of 120mAh) without any energy harvesting, sufficiently long for the dark seasons of the year. The sensor node contains ultra-low power sensors for temperature, humidity and light levels, with the possibility of adding several more sensors.*

N Hari Kumar et al [5] *proposed that Aquaponics farming is an incredibly prolific way to grow organic vegetables, greens, herbs and fruits without using any agro chemicals with the added benefit of fresh fish as a safe, healthy source of protein. It is a revolutionary technique for growing plants, where the aquaculture effluent is diverted through plant beds in a sustainable closed system.*

3. PROBLEM DEFINITION

In agriculture sector, monitoring field status all the time by manual operation is bit difficult and hectic process. And crops growth frequency always depends on the status of soil, moisture level and nutrients requirement fulfilment. Monitoring all these stuffs using internet is good idea but sometimes server down or internet speed can cause major problems. Sometimes few immediate action is required in field but due to latency and server down issue crop growth can impacted. Two fundamentally different topologies are normally considered in wireless networks: Multi-hop and star topology. Low power wireless communication standards allow for communication between battery powered
sensor nodes and gateways with both topologies.

4. OBJECTIVE

TEST-BED IN STAR AND MULTI-HOP CONFIGURATIONS

Two fundamentally different topologies are normally considered in wireless networks: Multi-hop and star topology.

Low power wireless communication standards allow for communication between battery powered sensor nodes and gateways with both topologies. The gateway includes both low power radio to communicate with the nodes, as well as other communication technologies such as Wi-Fi in order to connect the WSN to the local network or global Internet.

Star topology is a purely one-hop based topology, where the nodes communicate directly with a gateway. Star network is straight forward due to its structural simplicity. The one-hop based structure is the main advantage of star topology as no node is required to relay data.

5. REQUIREMENT OF SYSTEM

A. Solar Panel

B. Battery

C. ESP32 (Wifi + Bluetoth Module)

D. DHT11

E. BMP 180

F. LDR Light Sensor Module

SOLAR PANEL

Solar panel refers to a panel designed to absorb the sun's rays as a source of energy for generating electricity or heating.

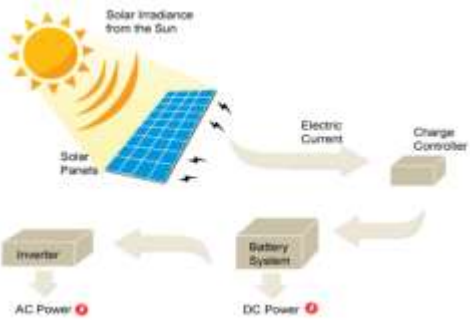

Fig. 3:- Solar Irradiance from the sun on solar panel

ESP32

ESP32 is a series of low-cost, low power system on a chip microcontrollers with integrated Wi-Fi and dual-mode Bluetooth. The ESP32 series employs a Tensilica Xtensa LX6 microprocessor in both dual-core and single-core variations.

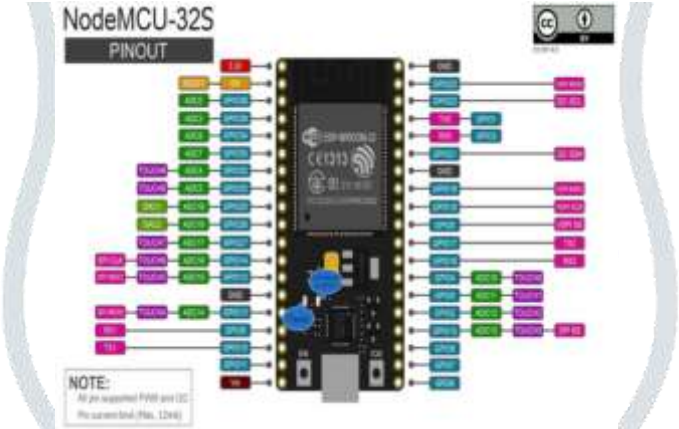

Fig. 6: Pin out of ESP32 Module

BMP 180

BMP180 *is one of sensor of BMP XXX series. They are all designed to* ***measure Barometric Pressure*** *or* ***Atmospheric pressure****.*

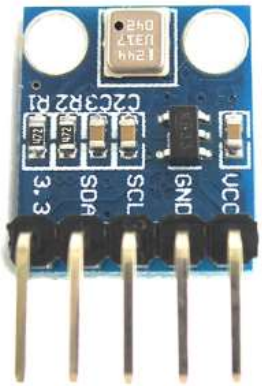

Fig. 11:- BMP180 Pin out

6. PROPOSED WORK

The proposed system includes dual facility of ESP32 module. We are going to use Wifi and Bluetooth facility of ESP 32 module for monitoring status of agriculture field and plant growth in presence of internet as well as in absence of internet with the help of Bluetooth. Plants require certain amount of specific nutrients for their growth, the supplied water contains all the necessary nutrients in required quantity. This water is fed to the plants at regular intervals of time. These nutrient values can be stored in the cloud database which will be helpful to check the number of days after which fresh water can be resumed to the tank.

The printed circuit board includes support for various on-board sensors for environmental values such as temperature, relative humidity, air pressure and visible

light, which can be used to determine and predict crop health and growth. Battery voltage level is also measured in order to identify faults in the energy harvesting. The unused pins of the BMD-340, as well as the specified I2C pins, are accessible through pin headers on the PCB to support sensors such as pH, nitrate levels and soil moisture. In order to further reduce the energy consumption of the nodes, Wake-Up Radio (WUR) may also be connected to the pin headers. The node is designed to function with power supply from both USB and energy harvesting, and can be programmed by using either J-TAG or USB.

The bq25570 IC from Texas Instruments is used for energy harvesting, battery charging and voltage conditioning.

The IC contains all necessary safety considerations for Lithium Ion (Li-Ion) batteries, such as programmable under and over voltage protection, as well as Maximum Power Point Tracking (MPPT) for optimizing the harvested energy from a solar panel. The configured output voltage from the bq25570 for the sensor node is 1:9V , however, this can easily be modified to higher voltages should an external sensor requires it, as the BMD-340 and sensors can safely operate with supply voltages of up to 3:6V . A Li-Ion battery with a capacity of 120mAh and a generic polycrystalline solar panel with a rated output of 0:36W is used for testing.

The sensor nodes are programmed to transmit at 8dBm power with a bitrate of 125kb=s in long-range mode. The actual bitrate is 1Mb=s, however, 8 symbols are transmitted per data bit in a forward error correction (FEC) scheme.

FEC enables the receiver to perform error detection and correction based on received symbols, allowing communication on what is usually considered lossy lings without increasing transmission power as the sensitivity of the receiving node is decreased. The energy consumption while transmitting is, however, increased, as the transmission requires more time.

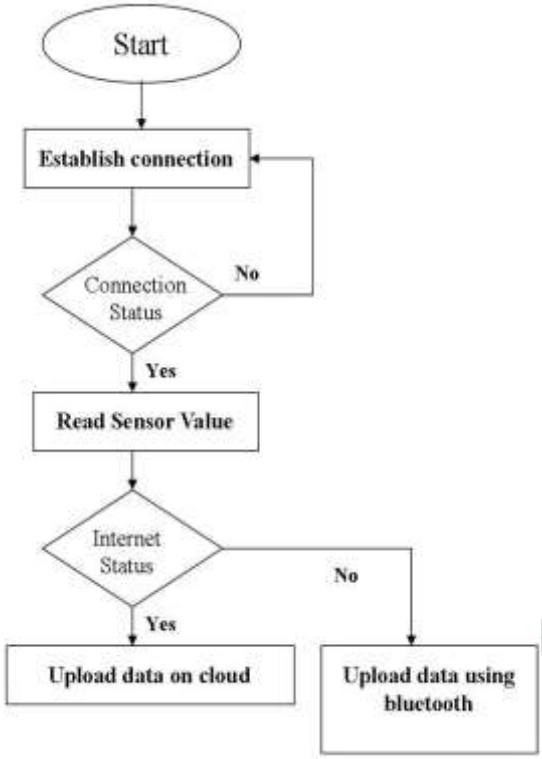

Fig:- Flowchart of Proposed System

Year	*Algorithm*	*Merits*	*Demerits*
2017	*Scatternet formation algorithm*	*Fish feeding and agriculture monitoring*	*Power issue*
2017	*IoT Communication protocols & algorithm*	*Self powered*	*Internet dependent*
2018	*Ciphering & Cryptographic algorithm*	*Functional based on SMS*	*Network issue & no self powered facility*
2018	*IoT algorithm for temporal networks*	*Self powered and Cloud computing*	*Internet dependent*
2019	*IoT Resource Management algorithm*	*Self powered & cloud computing with multi-hop topology*	*Internet dependent and no live monitoring of plant growth*

Table:- Comparisons table

7. CONCLUSION

In this study, the energy consumption of the topologies in different scenarios in the WSN under the same conditions and with the same number of nodes is compared. In this study, only the timing, control, and relay packages are taken into account in the package-based energy consumption. The excessive amount of energy consumed by the nodes during the first joining to the network is due to the more frequent use of timing, control and relay packets in this phase.

The increase in energy consumption is particularly noticeable in linear scenarios. The primary cause of this situation is; the maximum number of hops in the network, and secondly the number of packets used in the network setup phase. Therefore, it is clear that energy efficiency can be achieved by using less packet during the network setup phase.

Firstly, the crops cultivated by using this system are highly rich in the required nutrients and are free of chemicals. This system becomes very useful as it requires less amount of space for the cultivation and also produces a cost-effective product in the end.

According to the above proposed paper, Plants are grown organically getting rid of all the damages and losses caused by the pests and diseases. Any species of crops can be cultivated at any particular season or weather condition whereas on the other hand climate becomes an important factor affecting the growth and result in case of traditional methods

Considering all the above merits, we can conclude that self powered IoT Devices for agriculture based on multi-hop topology is the best method to cultivate plants and crops organically.

REFERENCES

[1] M. N. Mamatha and S. N. Namratha, "Design & implementation of indoor farming using automated aquaponics system," 2017 IEEE International Conference on Smart Technologies and Management for Computing, Communication, Controls, Energy and Materials (ICSTM), Chennai, 2017

[2] Rodrigo S. Jamisola Jr. "An Automated Solar-Powered Aquaponics System towards Agricultural Sustainability in the Sultanate of Oman." Mechanical and energy engineering department, Analene Montesines Nagayo, Cesar Mendoza, Eugene Vega and raad K.S Al Izki Department of Engineering. 2017 IEEE International Conference on Smart Grid and Smart Cities.

[3] D. Arı, M. Çıbuk, and F. Ağgün, 'Effect of relay-priority mechanism on multi-hop wireless sensor networks', Bitlis Eren Univ. J. Sci. Technol., vol. 7, no. 2, pp. 145–153, 2017.

[4] R. A. Kjellby, T. E. Johnsrud, S. E. Løtveit, L. R. Cenkeramaddi, M. Hamid and B. B. Lozano, "Self-Powered IoT Device for Indoor Applications," 2018 31st International Conference on VLSI Design and

2018 17th International Conference on Embedded Systems (VLSID), Pune,2018, pp.455-456. doi:10.1109/VLSID.2018.110.

[5] N Hari Kumar Experienced Researcher Ericsson Research, Sandhya Baskaran Senior Software Engineer, "An Autonomous Aquaponics System using 6LoWPAN based WSN." Sanjana Hariraj B. Tech, Information Tech. Anna University, Vaishali Krishnan B. Tech, I.T. Anna University.

[6] P. Paulose and P. Sreejaya, "Indoor Light Harvesting Using Dye Sensitized Solar Cell," IEEE Int. CET Conf. on Control, Commun., and Comput., pp. 152–156, 2018.

[7] Paparao Nalajala, P Sambasiva Rao, Y Sangeetha, Ootla Balaji, K Navya," Design of a Smart Mobile Case Framework Based on the Internet of Things", Advances in Intelligent Systems and Computing,Volume 815, Pp. 657-666, 2019.

[8] Ashkan Yousefpour and Genya Ishigaki and Riti Gour and Jason P. Jue, "On Reducing IoT Service Delay via Fog Offloading," IEEE Internet of Things Journal, Vols. 998 - 1010, no. 2, p. 5, 2018.

[9] E. Hakanen, R. Rajala, "Material intelligence as a driver for value creation in IoT-enabled business ecosystems", Journal of Business & Industrial Marketing, September 2018.

[10] B. N. B. Ekanayake and M. N. Halgamuge and A. Syed, "Review: Security and Privacy Issues of Fog Computing for the Internet of Things (IoT)," Lecture Notes on Data Engineering and Communications Technologies Cognitive Computing for Big Data Systems Over IoT, Frameworks, Tools and Applications, Springer, vol. 14, p. Chapter 7, 2018.

[11] V. Gokul and S. Tadepalli, "Implementation of smart infrastructure and noninvasive wearable for real time tracking and early identification of diseases in cattle farming using IoT," in International Conference on ISMAC (IoT in Social, Mobile, Analytics and Cloud) (I-SMAC), 2017.

[12] C. Yoon and M. Huh and S. Kang and J. Park and C. Lee, "Implement smart farm with IoT technology," in 20th International Conference on Advanced Communication Technology (ICACT), 2018.

[13] M.K.Gayatri, J.Jayasakthi, Dr.G.S.Anandhamala, "Giving Smart Agriculture Solutions to Farmers for Better Yielding Using IoT", IEEE International Conference on Technological Innovations in ICT for Agriculture and Rural

[14] Joaquín Gutiérrez, Juan Francisco Villa-Medina, Alejandra NietoGaribay, and Miguel Ángel PortaGándara, "Computerized Irrigation System Using a Wireless Sensor Network and GPRS Module", IEEE Transactions on Instrumentation and Measurements, 0018-9456

[15] G.J. Jong, Aripriharta, Hendrick et al., "A Novel Queen Honey Bee Migration (QHBM) Algorithm for Sink Repositioning in Wireless Sensor Network," Wireless Pers Commun 95, pp. 3209-3232, 2017.

[16] T. Wu, J. M. Redoute and M. R. Yuce, "Subcutaneous Solar Energy Harvesting for Self-Powered Wireless Implantable Sensor Systems," IEEE Int. Conf. of Engineering in Medicine and Biology Society, pp. 4657-4660, 2018.

[17] Rohana, and Suwarno, "Optimization Circuit Based Buck-Boost Converter for Charging the Solar Power Plant Indonesian," Journal of Electrical Engineering and Computer Science, pp. 254–258

[18] Shirvanimoghaddam, Mahyar & Shirvanimoghaddam, Kamyar & Abolhasani, Mohammad Mahdi & Farhangi, Majid & Zahiri Barsari, Vaid & Liu, Hangyue & Dohler, Mischa & Naebe, Minoo, "Paving the Path to a Green and Self-Powered Internet of Things," [Online]. Available: https://arxiv.org/pdf/1712.02277.