Design and Analysis of PEEK-CF Composite Brake Pedal using ANSYS Workbench.

Shreyansh Lunia
Dept. *of Mechanical Engineering*
Lovely Professional University
Phagwara, India
luniashreyansh1@gmail.com

Chetan Patidar
Dept. *of Mechanical Engineering*
Lovely Professional University
Phagwara, India
chtnptdr@gmail.com

Patel C.H.
(Faculty) Dept. *of Mechanical Engineering*
Lovely Professional University
Phagwara, India
patel.15755@lpu.co.in

Karan Dev Singh
Dept. *of Mechanical Engineering*
Lovely Professional University
Phagwara, India
ks808722@gmail.com

Bharat Nagar
Dept. *of Mechanical Engineering*
Lovely Professional University
Phagwara, India
bharatnagar099@gmail.com

Abstract: Over the last few decades because of increase in carbon emissions and plastic wastage It's forcing automobile and aerospace industries to look for lighter and recyclable materials. With advancement of thermoplastic polymers which are recyclable materials and emergence of high performance thermoplastic polymers like Polyether ether Ketone (PEEK), Poly aryl ether ketone (PAEK) with high mechanical, thermal and electrical properties with good flexural properties and Impact properties is attracting the industry to move for thermoplastic polymers. The present article focuses on suitability of PEEK-CF composite for brake pedal. The brake pedal is designed using Solidworks and analysed with ANSYS workbench and the results are compared with the conventional materials.

Keywords: Brake pedal, solid works, ANSYS, PEEK-CF, Steel, Aluminium Alloy

I. Introduction:

Brake pedal is one of the key automobile components used in automobiles ranging from cars to trucks. The major function of brake system is to reduce the speed of the automobile. These days automobiles are looking for the materials that are light weight, cheap with shorter manufacturing cycles. With increase in global warming, depletion of Iron and Aluminium reserves is making automobile industry to look for alternative materials. The polymer based composites are like Epoxy reinforced fibres and other thermoset polymers have attracted automobile industry. However with increase in plastic waste now automobile industry is looking for plastics that are recyclable and development of high performance thermoplastic polymers like PEEK and PAEK is attracting automobile industries and effectively used in components like seal rings, thrust bushings, bearings, wear pads, and gears. Dr.K.K.Dhande et al discussed the possibility of replacing metal brake pedal with composites. He discussed the impact of composite materials like polypropylene reinforced with glass fibre in reducing the weight of brake pedal and found that the composite material is 20% lighter when compared to steel and7% with respect to aluminium alloys [1]. The thickness of brake pedal is also one of the factor that influence the weight of the brake pedal. Ghadage Ganesh et al discussed the impact of thickness of brake pedal by taking s cold rolled steel sheet (FePo3 En10130 series) material with density 7800kg/m^3 and a tensile strength of 270Mpa. It is observed that when thickness of brake pedal is reduced from 2.9mm to 2.4mm a decrease in 15% of weight is observed which adds in improving the fuel efficiency of the car and also save the material cost [2]. Reducing the weight of the brake pedal without effecting the performance can be achieved by using optimization techniques. Topology optimization in ANSYS workbench helps to optimize the weight of the component. It is observed that the stress developed on the component are same before and after optimization techniques however a reduction of 16.45% weight is achieved which shows that topology optimization can be used as an effective tool in reducing the weight of the component [3]. Simulating results in ANSYS workbench is a mathematical approach and there are chances of differing the values obtained by ANSYS simulation and practical testing. The difference is very less the strain values are calculated and it is observed that the strain value after the analysis is 369.5e-3mm and after testing is 386e-3mm [4]. Rapid manufacturing is one of the fastest developing manufacturing techniques in manufacturing sector and the possibility of using this technique for automotive brake pedal using FEM is investigated by MIM Sargini et al., Ultrafus316L material is used to investigate its suitability for brake pedal. Ultrafus316L has a tensile strength of 465 Mpa with density 7.88 ton/m^3. A 54% reduction of fatigue weight is observed when compared to conventional materials used. Based on the results obtained the authors says that brake pedal material can be fabricated economically using Rapid manufacturing technology [5]. The comparison of f AISI 1018 and AISI 1020 is illustrated by Kunal Taksande et al., The static structural analysis generated a stress of 40 MPa which is under permissible tensile strength limit, and a Factor of safety of 9 is obtained which is very high and therefore increases the cost of manufacturing. The simulation of brake pedal can be simulated using , ABAQUS Standard module . From results it is observed that pedal arm design analysis the stresses couldn't pass the desired value and it is optimized to meet the design strength requirements. And it is compared with FEA analysis and their performance evaluation in the new vehicle development phase [6]. The force exerted by the human on brake pedal varies depending on the situation under normal condition a load of 200 to 700N is applied by under panic conditions the load applied is different and a load of approximately 2000N is applied. Deepa metal investigated the brake pedal safety under both normal and panic conditions The Design was simulated on solidworks software after which Analysis. Maximum deformation of 0.1mm with a 1.6 Factor of Safety is observed [7].

The present article discusses the suitability of PEEK-Carbon fibre composite with matrix material 60% and 40% fibre

content. The properties are taken from one of the leading companies that manufacture PEEK VICTREX . The brake pedal is designed using solid works and ANSYS software is used to simulate the brake pedal and the results are compared with standard material ie., steel. Topology optimization is used to optimize the weight of the brake pedal and is compared with original design.

II. Methodology

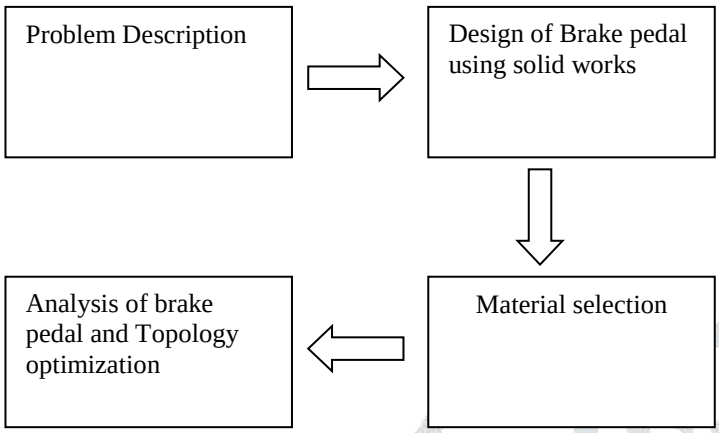

2.1 Problem Description:

The most common material that is used for brake pedal is steel which has a density of 8.05gm/cm^3. The main goal of any automobile industry is to reduce the weight of the component which in turn improves the fuel efficiency. Many works have been carried out to replace steel with aluminium and other composite materials like polypropylene as discussed in the introduction have been investigated.

However the emergence of high performance thermoplastic polymers likes PEEK which has a service temperature of 250^{0}C along with high mechanical, thermal, electrical properties haven't been much investigated. Owing to fact that these thermoplastic polymers are very light, recyclable and less manufacturing cycle time is attracting the automobile industry to look it as an alternative material to replace the metallic parts.

Table 1: Propeties of Steel AISI1020[8]

Property	Unit	Steel-AISI1020
Density	g/cc	7.87
Tensile strength (yield)	MPa	294
Tensile modulus	GPa	200
Poissons ratio		0.290

Table 2: Properties of PEEK reinforced with 40%CF

Property	Unit	PEEK-CF
Density	g/cc	1.44
Tensile strength (yield)	MPa	285
Tensile modulus	GPa	35
Poissons ratio		0.45
Flexural strength	Mpa	425
Compressive Strength	MPa	360

Table 3 : Properties of Al alloy [1]

Property	Unit	Al Alloy
Density	g/cc	2.79
Tensile strength (yield)	MPa	340
Poissons ratio		0.290
Tensile modulus	GPa	69

2.2 Design of Brake pedal using solid works:

The brake pedal is designed in solidworks as per the standard for automobile car. The design and dimensions of brake pedal is shown in fig 1 and fig 2

Figure 1: Design of brake pedal

Figure 2 : Design of brake pedal isometric view

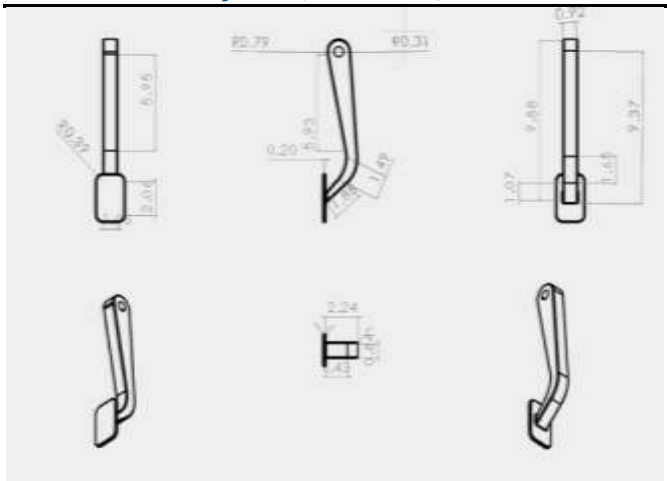

Figure 3 : Drafting of brake pedal

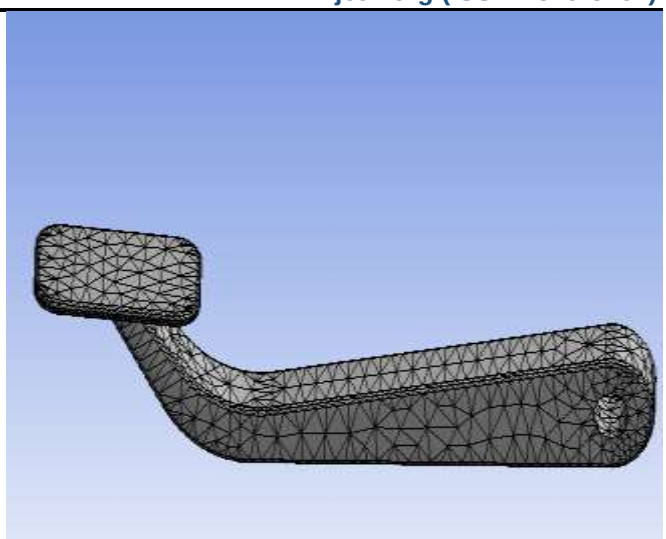

Figure 4 : Meshing

2.3 ANALYSIS OF BRAKE PEDAL:

Static Structural Analysis: Static structural analysis is used to find the displacements, strain, stress in a component based on the loading and boundary conditions applied. In static structural analysis the loading conditions are time independent.

Meshing: Meshing is a process of dividing components into small parts known as elements. These are used to give the loading and boundary conditions. The loading and boundary conditions for a brake pedal are shown in fig 3 and fig 4. A fixed support is given at one end and a load of 1000N is considered on pedal assuming the maximum load a driver can apply on pedal during emergency situations.

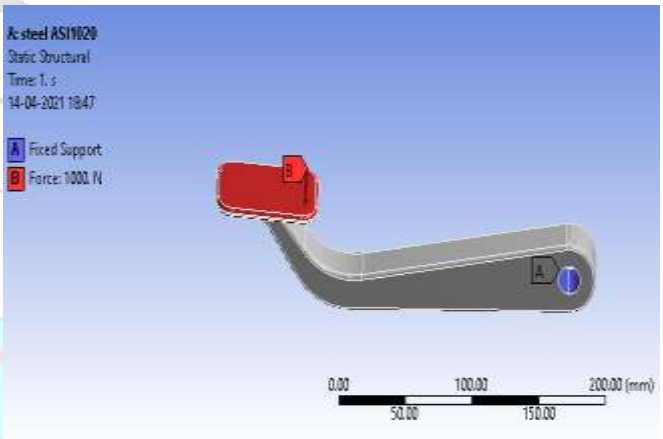

Figure 5 : Loading conditions

3.Results:

3.1 Deformation:

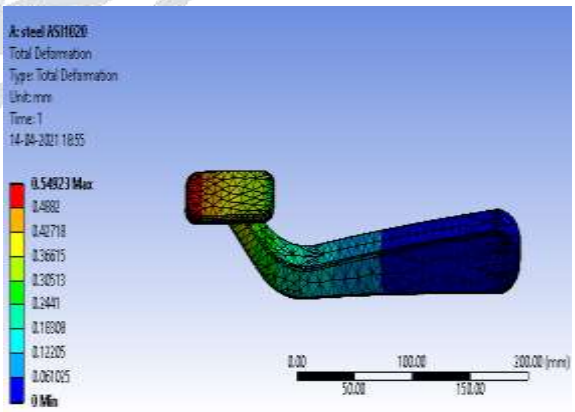

Figure 6 : Deformation of steel AISI 1020

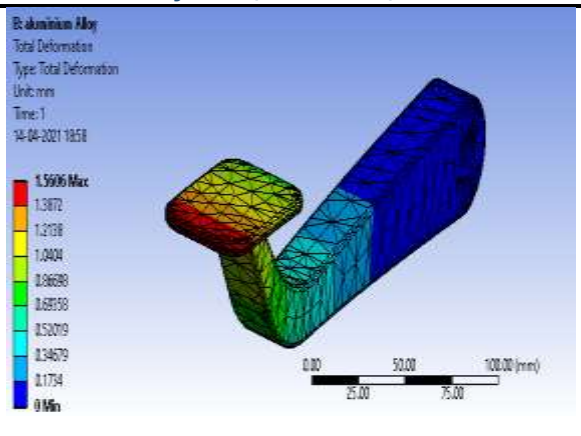

Figure 7 : Deformation of Aluminium alloy

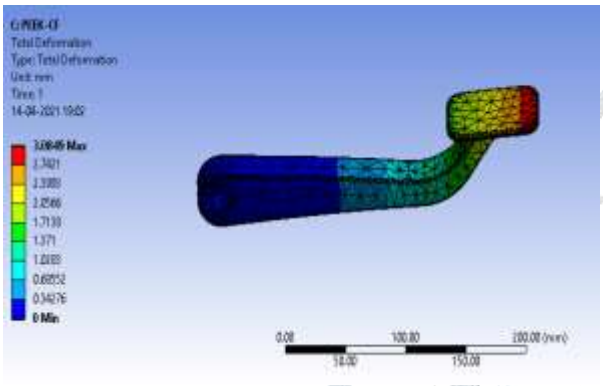

Figure 8 : Deformations of PEEK-CF composite

3.2 Equivalent stress:

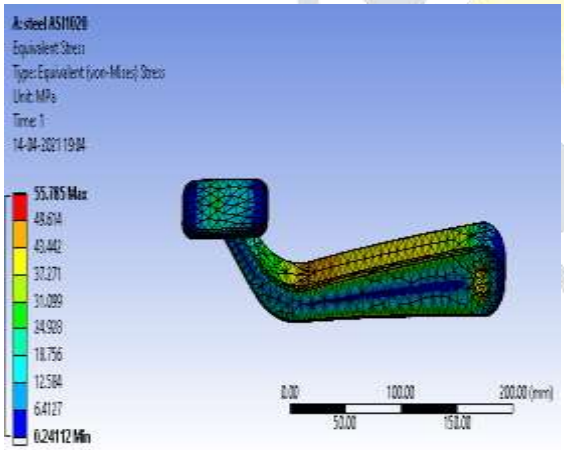

Figure 9 : Equivalent stress of AISI1020

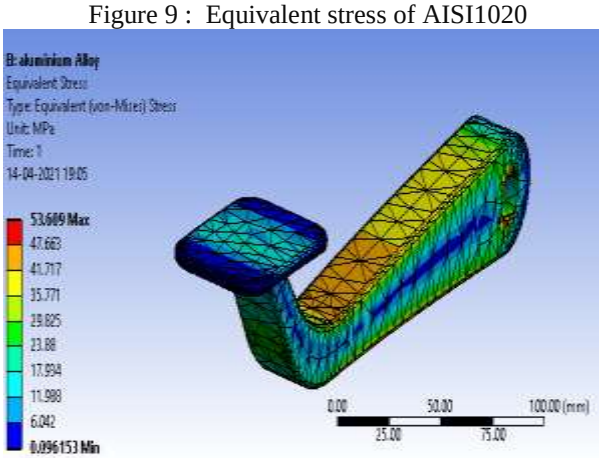

Figure 10 : Equivalent stress of Aluminium alloy

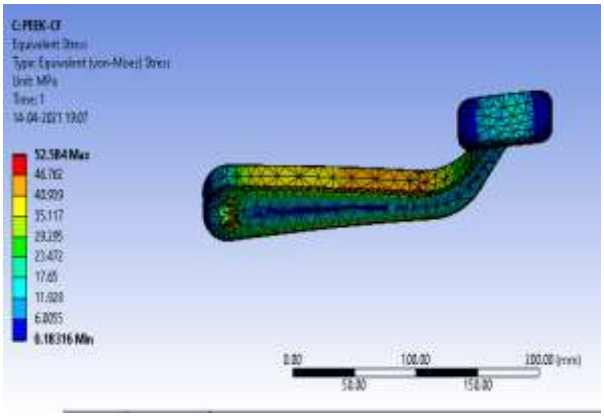

Figure 11 : Equivalent stress of PEEK-CF

3.3 Equivalent Strain:

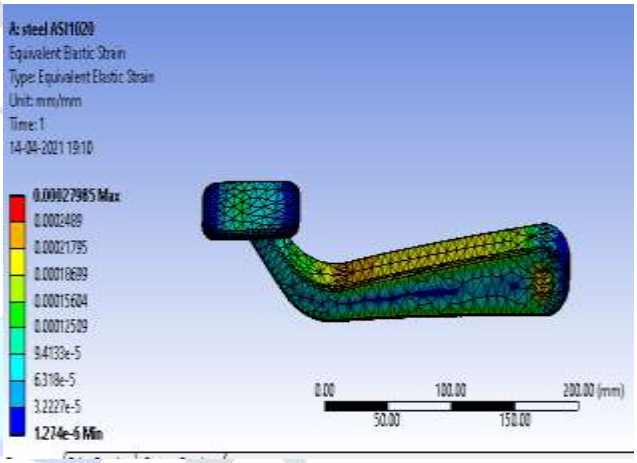

Figure 12 : Equivalent strain of AISI 1020

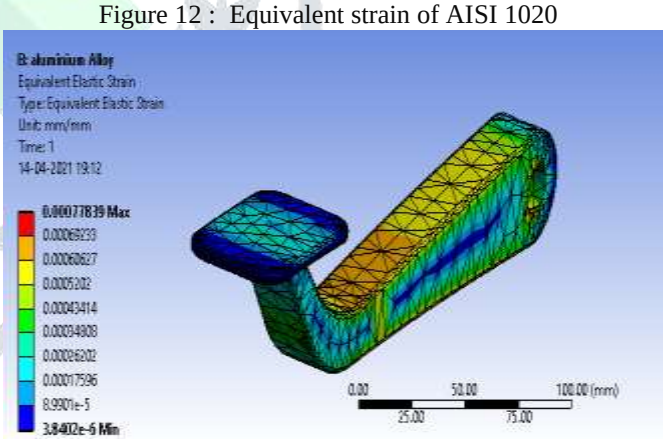

Figure 13 : Equivalent elastic strain of Aluminium alloy

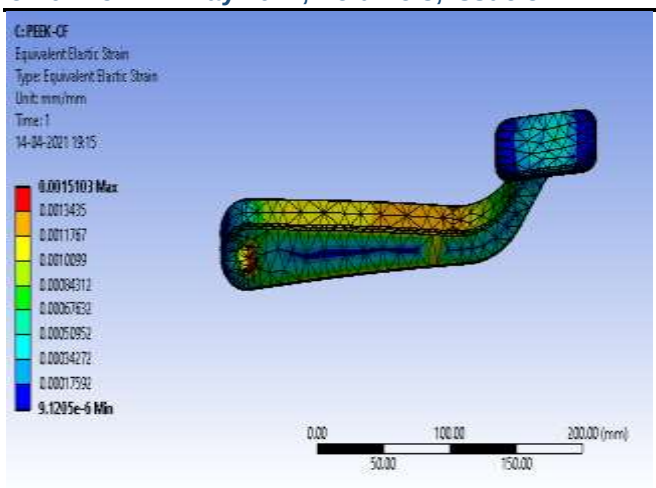

Figure 2 Equivalent Elastic Strain of PEEK-CF

III. Conclusion:

Table 4 Comparission of Materials

	AISI1020	Aluminium Alloy	PEEK-40%CF
Mass (Kg)	1.47	0.52	0.27
Deformation (mm)	0.54	1.56	3.08
Equivalent Stress (Mpa)	55.78	53.60	52.58
Equivalent strain	0.00027	0.00077	0.0015

In this present article three materials are chosen for analysis of brake pedal AISI 1020, Aluminium Alloy and PEEK-40%CF and a load of 1000N is applied taking into the consideration of driver applying the load in an emergency situation. The results are tabulated as shown in table 4: It can be concluded for the same applied load the stresses generated on the brake pedal are almost equal for the same load. The stresses on AISI 1020, Aluminium alloy, and PEEK-40%CF are well within the limits which show that the design is safe. For the above analysis it can be concluded that PEEK-40%CF is 81.63% and 50% lighter when compared AISI1020 and Aluminium alloy.

IV. References:

[1] D.K.K. Dhande, P.. N.I. Jamadar, S. Ghatge, Conceptual Design and Analysis of Brake Pedal Profile, Int. J. Innov. Res. Sci. Eng. Technol. 03 (2014) 17432–17441. https://doi.org/10.15680/ijirset.2014.0311048.

[2] G. Ganesh, P. Unmesh, S.S. Kadam, Design and Analysis of Commercial Automotive Vehicle Brake Pedal , Appl. Mech. Mater. 813–814 (2015) 964–971. https://doi.org/10.4028/www.scientific.net/amm.813-814.964.

[3] A.N. Gawande, G.E. Kondhalkar, Design Analysis and Optimization of Automotive Brake Pedal, 3International Conf. Ideas, Impact Innov. Mech. Eng. (ICIIIME 2017). 5 (2017) 227 – 232.

[4] A.B. Pedal, M. Avhad, P.A. A, P.Y. Ingulkar, Design Analysis & Topology Optimization of, 6 (2019) 880–888.

[5] M.I.M. Sargini, S.H. Masood, S. Palanisamy, E. Jayamani, A. Kapoor, Finite element analysis of automotive arm brake pedal for rapid manufacturing, IOP Conf. Ser. Mater. Sci. Eng. 715 (2020) 0–8. https://doi.org/10.1088/1757-899X/715/1/012020.

[6] Y. Zheng, H. Xu, B. Li, Vehicle brake-pedal arm strength analysis and optimization based on ABAQUS, Adv. Mater. Res. 549 (2012) 875–878. https://doi.org/10.4028/www.scientific.net/AMR.549.875.

[7] A. Deepa, D. Yashwant Singh, S. V. Mukesh Varma, P. Khakhar, Analysis on Multi Linkage Brake System with Variable Pedal Ratio, Mater. Today Proc. 5 (2018) 13606–13611. https://doi.org/10.1016/j.matpr.2018.02.357.

[8] K. Taksande, P. Maske, A. Chel, Design and Development of Brake Pedal and Drum for Multiutility Farm Vehicle, Int. Res. J. Eng. Technol. (2020). www.irjet.net.