JETIR.ORG ISSN: 2349-5162 | ESTD Year : 2014 | Monthly Issue
JOURNAL OF EMERGING TECHNOLOGIES AND INNOVATIVE RESEARCH (JETIR)
An International Scholarly Open Access, Peer-reviewed, Refereed Journal

Novel Concept of Using Off-Grid Hybrid Solar PV with Solar Tree A-300

Kalpit Kumar Gurjar[1], Sushma Lohia[2]

[1]M.Tech Research Scholar , [2]Assistant Professor

Jagannath university, Jaipur, Rajasthan, INDIA

Abstract : Solar Energy is the main source of the renewable Energy and the unlimited source of Energy. The Concept is to make use of the Solar Tree to form the structure for generating more power backup form the lesser space requirements. Concept of using A-300 Solar Cells for better optimization. Solar hybrid systems are power systems that join solar power from a photovoltaic system with another energy source. One of the most widely recognized hybrid systems being PV diesel hybrid system, coupling PV and diesel generators, otherwise called diesel gensets. The diesel generators are utilized to consistently fill in the hole between the heap and the power produced by the PV system.

***IndexTerms* – Solar Energy , Solar Tree, Hybrid System , A-300.**

I. INTRODUCTION

For an extensive time allotment, most countries relied upon immense power frameworks to fulfill power needs. Regardless, various spaces in the world in spite of everything experience the evil impacts of a harmed or non-existent power matrix. That is increased by financial and portion advancement of the populace that forms the interest which is expected to augment 57% by 2050. With the falling cost of decentralized headways,

the use of various close by energy age units, called microgrids, is expanding. More than 2258 assignments has been found all over the planet. These microgrids, are by and large used in the advanced and business field similarly as powerplants to deal with metropolitan regions and mechanical workplaces, as they offer a more genuine and strong energy nimbly elective than united power lattices. [1]

A microgrid is an energy dispersion arrange that relies upon adjacent techniques for making power. It is expected to work unreservedly or in synchronization with the public system, inside a described zone. In order to enable withdrew or remote zones to ensure about their financial development and benefit from strong energy, it is critical to ensure the creation and conveyance of force. It is similarly an opportunity to profit from clean circled and economical power source.

The term microgrid is similarly regularly used to depict nano-networks and little lattices. There is no exact definition anyway we can set them appart:

- Picogrid are little power deftly structure that give the associated things confined cutoff. Pico solar photovoltaic machines are logically being used in Sub-Saharan Africa. Those systems named Pico PV or Solar Pico System (SPS) are prevalently conveyed for commonplace zones with jolts issues where the energy demand is exorbitantly low or the cost of a Solar Home System not sensible enough to rely upon a nanogrid.
- Nanogrids are single spaces of force with a singular actual layer of force conveyance. Regardless of the way that in spite of everything furnishing energy with confined breaking point, the size of the applications are a higher need than those of a picogrid. For example Nanogrid applies for Solar Home Systems (SHS) where each house is fueled by an independent photovoltaic structure. Most normal SHS are made from a lone solar board, a battery with a prepaid meter and electrical connection offering sufficient energy to effortlessly a house with fundamental power needs.
- A microgrid structure is a power deftly structure that comprises of weights and scattered energy resources, for instance, economical power sources, combined warmth and power age, energy unit and energy accumulating systems.

Microgrids can work independently or in synchronization with the power lattice, ensuring the effortlessly with neighborhood and trustworthy energy reliably. [1]

Energy is principal to the financial and the social development and furthermore works on private fulfillment. It is critical for the making social orders [1]. In the Nigeria, most private homes are then associated with the electric based lattices. In any case, there then, at that point, still exists the few of "off-network" or the distant areas, which, for cash related as well as natural reasons related to their great ways from a current electrical cables, are then not associated with the utility-based grid. By far most of these living plans get their power from gas or the diesel-powered based generators, one which can likewise be riotous and one that can have the

shortcoming of growing the ozone exhausting substance emanations one which adversely influences the climate. Amidst the ecological issues of using petrol and diesel-based generators, and the cost of then running them is additionally extremely high. In view of the massive cost of running oil/diesel generators, various Nigerians are glad to move from using these of the customary generators for the usage of the supportable power sources propels.

Reasonable power sources developments, (for instance, solar-photovoltaic systems) that can be restricted and furthermore decentralized unlike the public power framework. And furthermore, this licenses end-clients to make their own power any spot they are found. Moreover, the advances don't need the any of the running expenses, as opposed to the customary petrol/diesel-based generators.

The establishments of the solar power-based framework to replace or the offset the segments of the diesel power age is the choice to think about it for the far off private homes. The complete overriding of the diesel age with the solar power is additionally ordinarily not functional, in light of low solar commitment during the turbulent season. Nevertheless, the solar/diesel-based combination system known as the hybrid structures can turn out to be really strong and monetarily insightful given the right circumstances, (for instance, ideal assessing). Hybrid energy applications are of extending interest, and an inside and out directed hybrid solar-diesel structure can achieve lifetime fuel save assets, while ensuring strong power deftly. To the degree that diesel fuel is diminished, and such systems reduce CO2 similarly as the particulate based outflows one that are terrible to prosperity. They are one of the practical choices in areas restricted from the frameworks. [1]

Hybrid Renewable Energy Systems (HRES) thatcan be found under different terms and furthermore the definitions and furthermore moreover then considered as the part of the overall ideas of the Distributed based Energy Resources (DER) or the Distributed Generation (DG). Furthermore, there are various terms and furthermore the ideas that engage to and the investigation forward jumps related to HRES within literature.[1]

Past what 12 of the terms that can be viewed as recorded as a hard copy to insinuate the advancements in the HRES. An amount of the 172 articles that can have been in HRES under various stating. By far most of them suggest the hybridizations of the customary based energy systems introducing supportable power sources as choices as opposed to the lattice associations. That should be visible in gure 1.2, the phrasing goes additionally from the most wide terms of the Renewable based Energy Sources (RES) to the most particular.

"Hybrid Renewable Energy Systems (HRES) additionally comprises of somewhere around two of the energy sources, with in any occasion one of them feasible and facilitated with power control equipment and a discretionary amassing structure." HRES as shield over that can be found in the composing in like manner under various terms such Terms implying the HRES advancements and furthermore the quantity of the articles.[2]

As free hybrid-based energy (or the power) structure, o - network, the remote, the islanded, hybrid-based framework, hybrid-based energy (or the power) system, micro grids, more modest than common matrices or the independent based power systems. Additionally, relevant composition for those of the systems that can be tracked down that under the arrangements of Distributed Energy Resources (DER) or Decentralized Generation (DG), among others as portrayed immediately.

Free Hybrid Renewable Based Energy (or the Power) System

Free Hybrid Renewable Based Energy (or the Power) Systems on that are found as the combinations of a couple of age based systems, with at any rate one feasible (the photovoltaic (PV), the breeze, the diesel, the hydrogen, power gadget), and furthermore the discretionary accumulating structure (battery, energy unit).

These are then performed hybridization by uniting a couple of the age systems and the discretionary storing are found in entirely unexpected designs as follows:

Without referencing the "Free" limit or limit by plan, the going with structure designs that are amassed in the composition as Hybrid Renewable Based Energy (or the Power) Systems:

O - lattice are found inseparable from the Stand-alone hybrid energy or the power systems as the incorporations of the couple of the age systems, with at any rate one maintainable wellspring of the energy (or the photovoltaic (PV), the breeze, the diesel, the hydrogen, power gadget), and furthermore the discretionary accumulating structure (battery, energy part). While suggesting O - lattice systems thefactor area is likewise generally without admittance to a rule power network, so all around they are placed in the far off areas or nation locales.

For the circumstance an o - network structure might be additionally associated with the lattices, by then the usefulness of the working separated and independently from the matrices is otherwise called free or islanded mode. It has been identi ed a tendency of utilization of o - network for an inexorably extensive group, while the utilization of autonomous is continuously restricted inside the assessment community.[3]

II. Solar Tree

The working of a solar tree might be a huge load of like that of a genuine one-leaf-like solar sheets related through metal branches utilizing daylight to frame energy. Transparency of place where there's introducing solar sheets for an enormous scope is regularly a tangle inside the movement of sensible power source. A reaction for this is regularly establishing solar trees, which are coherently ergonomic, utilizing little space. Solar trees are reciprocal to rooftop solar systems, or other green construction measures, representing these more prominent undertakings and their regular benefit.The Solar tree sheets charge batteries during the day. At sunset, the tree therefore enacts LED lights. it's modified to facilitate the extent of daylight it produces. Solar trees are flexible and go to oppose the sun and produce most incredible conceivable extent of energy utilizing a system called "spiraling phyllataxy". Its concluded turns permit even the lowermost solar sheets to encourage sufficient daylight for power creation. It can in like way be used in street lighting and mechanical power supply systems.

Solar tree is framed of metal design and have solar sheets at the most noteworthy as against parts of authentic tree. Fundamental social event of solar tree might be a reasonable unfilled chamber get together toward one side to engage the relationship of the upper, smaller shaft which need to terminate the upper board. This board is about high over different sheets at an upward edge. the sting gives a uniform area to the daylight offering little appreciation to the sun heading during the day. The height at where it's set enables an inexorably significant board region which won't cover the lower set boards. The progression is shrewd to be utilized in off-the-

network remote zones or in places that require point-obtained light like vehicle parks and street lighting. In addition, with prop openness or battery store, the solar tree can in like way supply power any place required. The plant's design can change steady with various parts.

In India, for instance , solar trees can increment satisfying energy interest while saving space. the occasion can guarantee persevering heap of force in zones that require more power supply and may help different who aren't connected with the framework. solar power is affordable and clean in nature and presents a far superior decision over different techniques for power creation.

III. Literature Survey

A. A. Hossain [4] Load Based shedding's is an especially normal peculiarity's in the Bangladesh. By and large throughout the late spring, the Gazipur experiences more than 15 of the long periods of weight shedding's every day. And furthermore, this will cause the interruption in the educational works in the IUT grounds. The inspiration driving this work is to separate the expense's streamlining of the PV-diesel hybrid-based energy age reason system for the IUT insightful construction, which then, at that point, can be used during the lengths of the heap shedding. Likewise, there are the two of the models, one is with the main diesel-based generators and the other is with the PV-diesel based hybrid generator which is additionally have been reproduced.

H. W. Salih, S. Wang and B. S. Farhan [5] The is a direct result of the intermittence of yield PV based power, the makers have made and realized the Perturb and Observe (P&O) based MPPT strategy using innate estimation (GA) to tune and furthermore to secure the ideal limits of the PI based regulators for the independent based PV-diesel based hybrid power systems. This proposed PI regulators then, at that point, coordinates the yield of lift converters for the PV structure. The results of this controls system are differentiated and the customary P&O Based MPPT strategy that relies upon PI trial and error method for a comparable structure. The proposed novel characterized regulators that has worked on the unique reactions of the PV Based structure yields powers and furthermore the voltage-based motions damping.

C. D. Rodríguez-Gallegos, K. Rahbar, M. Bieri, O. Gandhi, T. Reindl and S. K. Panda,[6] This paper considers the estimating issue of PV-battery-diesel Base hybrid systems using arched the streamlining based approach. The context oriented examination occurs in an Indonesian island where the store demand totally depends upon a lone diesel-based generator (DG). Additionally, the goal is to smooth out the amount of the solar loads up and batteries are likewise to be acquainted with lessen the outright cost of the system over the lifetimes of the 25 years.

A. M. Mahmud and R. E. Blanchard [7] in 2006, there was an important amount of schools in country Sabah in Malaysia that had no entry to 24-hours power. Augmentation of network power systems becomes uneconomical taking into account the topographical states of these locales and the low electrical energy thickness solicitation of the populace. Malaysia's natural progression plans, thusly, underlines on the need to work on the learning and everyday climate at the nation schools. The abundant solar energy resource in the locale is used for giving elective power deftly to these schools. 160 schools in commonplace Sabah were presented with solar photovoltaic (PV)- diesel hybrid systems. Notwithstanding the way that the systems have been in activity for specific years, data prompting the systems execution is difficult to find. Thusly, understanding the system activity is a significantly huge experience and examples can be taught for execution of the provincial jolt program (REP). This paper depicts the finding from a field learn at 11 solar PV-diesel hybrid systems. It highlighted a couple of limits that portray the steady nature of a solar PV system. The solar PV systems presented at schools in provincial Sabah were viewed as reliable. They lessened dependence on the diesel fuel utilization and totally utilized clean energy from the sun. It is key to have trustworthy solar PV system that can give sufficient energy to the load demand.

C. D. Rodríguez - Gallegos et al [8] This paper proposes one more procedure to choose the game plan and estimating of diesel-based generators (DGs), the photovoltaic based solar sheets (PV) and furthermore the batteries for the off-matrix based systems. In this proposed work, creators objective is to decrease the full scale system cost while fulfilling the pile demand and furthermore keeping up with the lattice based power characteristics, among of the various kinds of requirements. Furthermore, this is achieved by using two atom swarm-based enhancement (PSO) computations, the first for circumstance and assessing of the contraptions and the second for their preparation.

Shatakshi, Ikhlaq, B. Singh and S. Mishra [9] authors present an isolated the microgrids, with the simultaneous generators (SG) based diesel ages (DG) structure in the mixes with the solar based photo voltaic (PV). Additionally, the DG will likewise supply the capacity to the pile directly, and furthermore the battery supported voltage source converters (VSC) is then additionally associated in the shunt with the end goal of the normal coupling (PCC). Likewise, the PV bunch is then associated at the DC-association of the VSCs through the lift converters. The high solicitation improvements based adaptable channel controls plan is used for keeping up the idea of the PCC voltages and furthermore the source streams.

C. D. Rodríguez-Gallegos et al [10] This paper proposes one more technique to choose the estimating and furthermore the sitting of the diesel-based generators (DGs), the photovoltaic (PV) based solar sheets, and furthermore the batteries for the off-matrix based systems. In this proposed work, the objective is to diminish the hard and fast system cost while fulfilling the store solicitation and keeping up the power idea of the structure, among various of the limitations. Then, at that point, this is achieved by using the two-stage atom swarm-based optimization computation; the first is for the sitting and estimating of the system and afterward second with the end goal of its reserving. Three relevant investigations, specifically just the DGs, the DGs + PV, and furthermore the DGs + PV + batteries-based systems, considering the energy need of the Indonesian islands are then presented.

A. J. Mahdi and B. A. Fadheel [11] This paper expects to develop a computation for the financial assessment in the middle of the diesel-generator set (DGS) and furthermore the PV solar based structure as it is shown by the Iraqi circumstances and furthermore the market.

The models of monetary assessment rely upon the assessments of the presence cycle costs, otherwise called LLC, by choosing of the basic expenses, the discontinuous based help costs, the replacement costs, the diesel fuel costs and furthermore the full scale energy

yields more than 25-yearsof the lifetime. The expense correlations in-between the traditional 125 kVA based DGS (for instance inferior quality and astounding sorts) and furthermore the 100kW PV solar based structure using the proposed estimation.

IV. Proposed Work

4.1 Solar Model

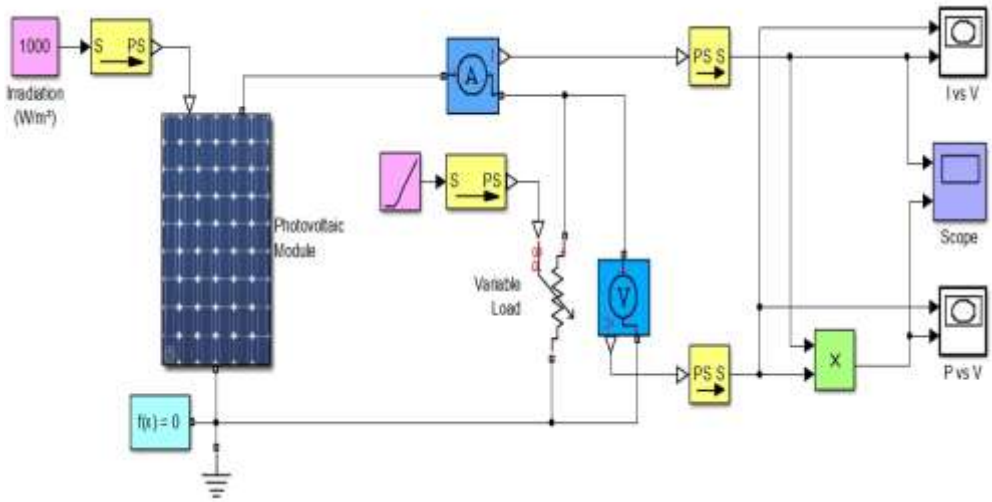

Fig 4.1 Solar Photovoltaic Model

With the ultimate objective of use, we use MATLAB R2020, we have reproduced the sun based board and warm exhibiting of working with the help of simscape tool stash of Simulink. In this diversion, the PV daylight based board model using sun controlled cell block open in the simscape library where 36 sun based cells are related in game plan. Each sun fueled cell is having short out current of 8.9A and open circuit voltage of 0.632V. The generation model for a PV cell was expected for evaluating the IV brand name bends of the photovoltaic board with respect to changes on normal limits (temperature and irradiance) and cell limits (parasitic impediment and ideality factor). This model can be used to analyze the improvement of MPPT(maximum power point following) computation close by the Shockley diode condition. In case of the reenactment concerning building showing, we used the warm library in simscape to show the design. Warmth mass is used for depicting impacts, for instance, material warm components, a blend of warm components and warmth move properties. For assessing the temperature of the source and warmth stream, temperature sensor block is used. Convective warmth move block is used for use of convection and radiative happening in divider internal moreover, outer layer.

4.2 Model Data

For the analysis of the proposed model , we have taken the solar data which is being collected from the places like Kolkatta , Rajasthan remote areas and such table is shown below for the same.

Table 4.1 Solar Data Collection

--Timestamp---	Temp	Chill	HIndex	Bar snisnim	Solar	ET	UV	Day
----------	----	------	-------	------	------	------	----	----
20190101 12:00	33.9	33.9	33.9	29.9	298	0.004	-100000	1
20190102 12:00	30	23.1	30	29.574	129	0.002	-100000	2
20190103 12:00	17.7	6	17.7	29.359	185	0.002	-100000	3
20190104 12:00	27.5	19.4	27.5	29.639	416	0.006	-100000	4
20190105 12:00	26.3	21.5	26.3	29.698	180	0.003	-100000	5
20190106 12:00	26.3	18.6	26.3	29.682	426	0.006	-100000	6
20190107 12:00	34.6	26.9	34.6	29.852	423	0.007	-100000	7
20190108 12:00	26.2	26.2	26.2	29.731	249	0.004	-100000	8
20190109 12:00	24.6	13.5	24.6	30.056	427	0.006	-100000	9
20190110 12:00	19.3	19.3	19.3	30.253	370	0.004	-100000	10
20190111 12:00	29.1	29.1	29.1	30.108	321	0.004	-100000	11
20190112 12:00	31.4	23.5	31.4	30.012	480	0.006	-100000	12
20190113 12:00	22.4	22.4	22.4	30.19	153	0.002	-100000	13
20190114 12:00	31	31	31	30.295	162	0.002	-100000	14
20190115 12:00	40.4	40.4	40.4	30.078	134	0.003	-100000	15
20190116 12:00	42.7	42.7	42.7	30.115	433	0.007	-100000	16
20190117 12:00	34	34	34	30.141	148	0.002	-100000	17
20190118 12:00	36	29.7	36	29.807	264	0.003	-100000	18
20190119 12:00	35	35	35	29.94	70	0.001	-100000	19
20190120 12:00	36.5	36.5	36.5	29.913	171	0.003	-100000	20
20190121 12:00	37.4	37.4	37.4	30.237	462	0.007	-100000	21
20190122 12:00	35.3	28.3	35.3	30.026	459	0.007	-100000	22
20190123 12:00	31.1	25.2	31.1	30.321	476	0.007	-100000	23
20190124 12:00	29	29	29	30.236	255	0.003	-100000	24

Table 4.2 Voltage and Current Data

Voltage [V]	Current [A]
0.0000	5.7500
0.0074	5.7497
0.0148	5.7494
0.0222	5.7491
0.0296	5.7488
0.0369	5.7485
0.0443	5.7482
0.0517	5.7479
0.0591	5.7476
0.0665	5.7473
0.0739	5.7470

4.3 PV Calculation

The code for PV array has been developed by solving conventional equation in MATLAB

Boltzman Constant K=1.38065e-23
Electron's Charge q=1.602e-19
Desigerable Short Circuit Current Iscn=8.21
Desigerable Open Circuit Voltage Vocn=32.9
Temperature Voltage Constant Kv=-0.123
Temperature Current Constant Ki=0.0032
Number of Series Conected Cells Ns=54
Operating Temperature in Kelvin T=25+273
Temperature at STC Tn=30+273
Irradiance at STC Gn=1000
Diode Ideality Constant a=2.0 [1<a<2]
.

4.4 Implementation for Off-Gird Parameters

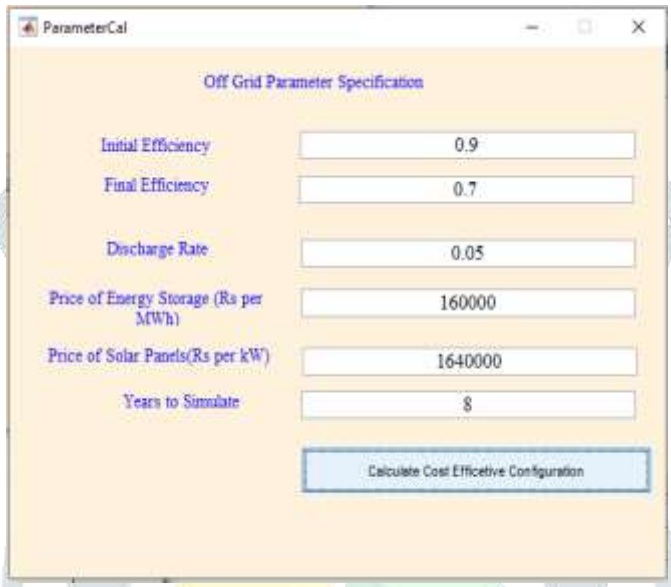

Fig 4.2 Implementation

IV. RESULTS AND DISCUSSION

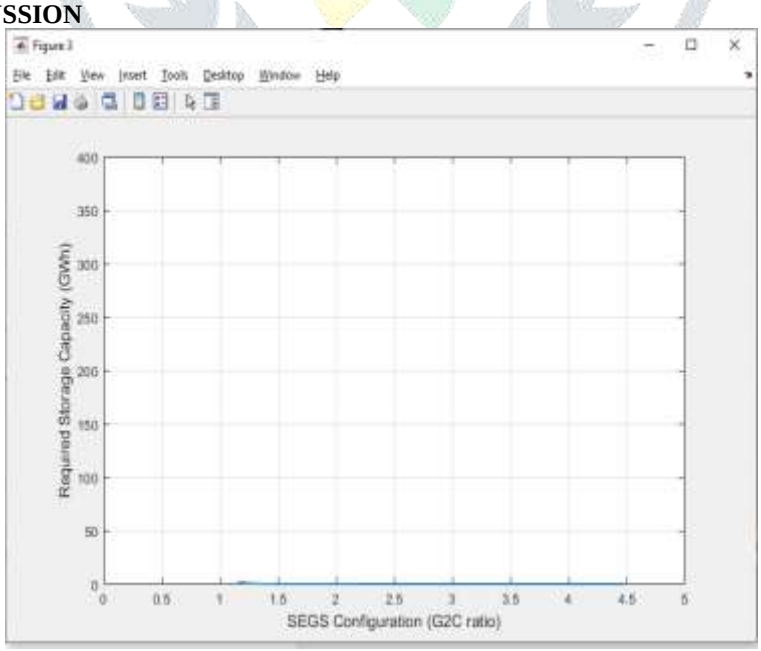

Fig 4.3 Required Storage Capacity VS G2C Ratio

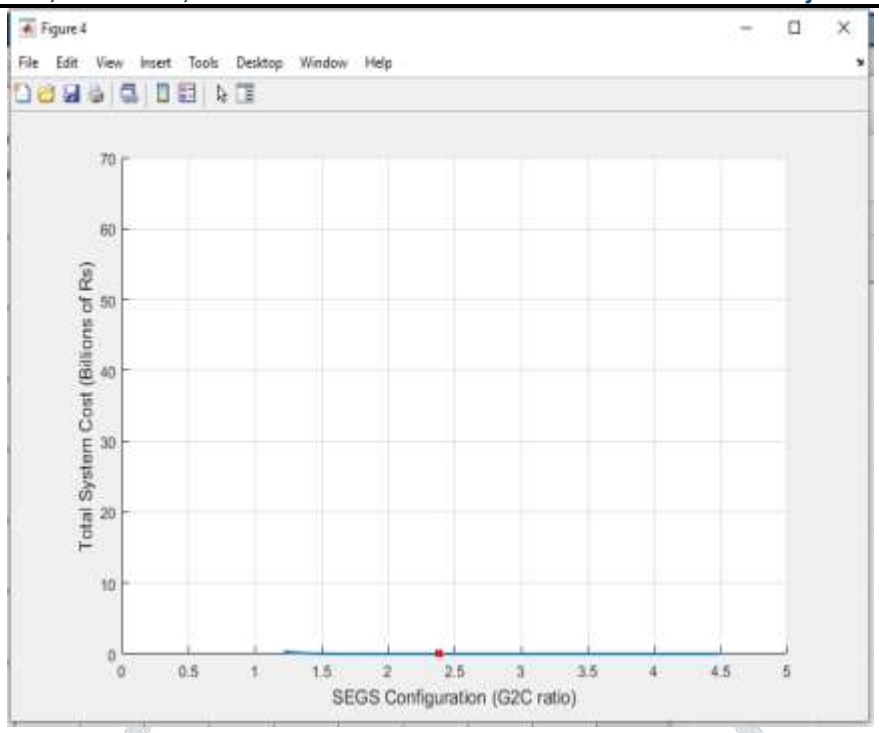

Fig 4.4 Required Storage Capacity VS G2C Ratio

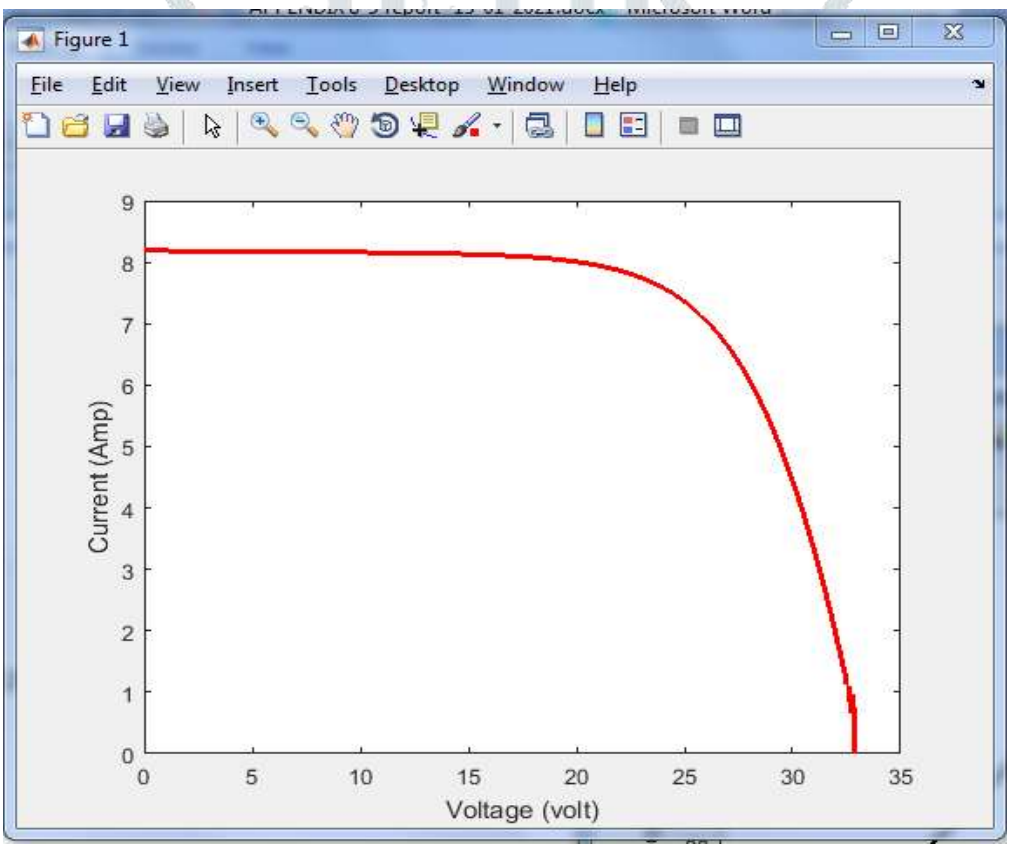

Fig 4.5 Current Voltage Graph

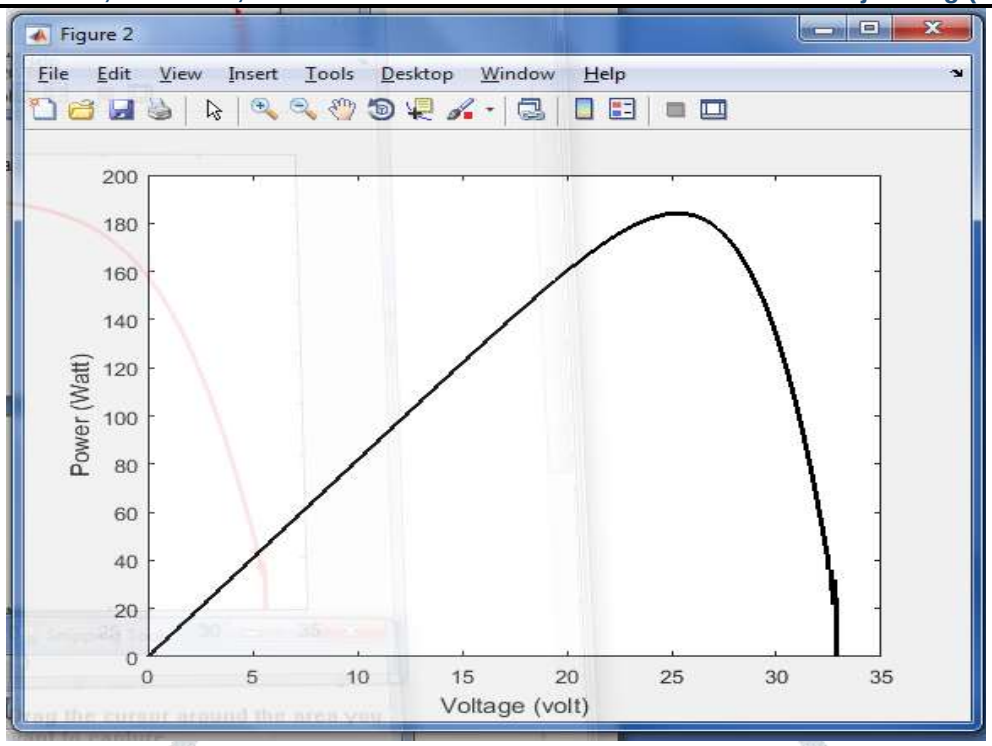

Fig 4.6 Power Voltage Graph

V. Conclusion

The proposed structure has the potential gain of the power outages. Power outages can occur with no notification. Losing power infers living without lighting which can be a bother present second and astoundingly disturbing in the long haul. The deficiency of force shifts from storms, freezing precipitation, hail whirlwinds and high breezes which can hurt electrical cables and stuff. Cold spells or warmth waves cause request which prompts over-troubling the electric connections, transformers, and other tech that in the end crash and burn. Off-matrix solar energy systems are reliable for power outage circumstances as these systems store energy and reliably ready for potential failures. A home with an off-lattice solar power structure can drag out experiencing blackouts amidst any potential disasters. The proposed structure helps in reducing power costs. Oil subordinates are at this point the world's fundamental energy source.

A property holder with a ton of gadgets can present it all alone, which can assist with diminishing the overall structure cost significantly. Off-lattice solar-controlled systems contributes wherever diverged from the conventional framework power where lines tighten to using existing posts and establishment or complete extreme burrowing to invest the effort where it's crucial. The proposed structure is moreover basic choice for Rural Areas. Power is perhaps the most vital issues of inhabitants of rural and remote zones as these region are inclined to blackouts. Since nation and far off domains have less establishments, associating with the essential electrical lattice can be a test and incredibly excessive anyway off-matrix solar energy systems offset this tremendous work. People who live in districts from the essential network can save cash through off-lattice systems. These systems fix things such that clients don't have to pay extra to associate with anything. It offers people the chance to live wherever while having the choice to make and control power. Computation evaluates the PV system size and energy storing limit concerning a boundless, off-lattice (free) power structure. By considering bigger than regular PV system gauges, the estimation concludes the energy amassing limit essential for continuously inquisitively huge PV structure sizes. The result is a chart demonstrating how much energy amassing limit versus the sum PV are expected for an off-matrix structure, which shows a regressive relationship among age and limit. Since PVs and energy amassing have different expenses, the computation enrolls the expense of each off-matrix setup and chooses the most insightful structure.

References

1. M. R. Khan, "Prospect of solar PV based irrigation in rural Bangladesh: A comparative study with diesel based irrigation system," 2nd International Conference on the Developments in Renewable Energy Technology (ICDRET 2012), Dhaka, 2012, pp. 1-3.
2. S. A. Jeddi, S. Hamidreza Abbasi and F. Shabaninia, "Load frequency control of two area interconnected power system (Diesel Generator and Solar PV) with PI and FGSPI controller," The 16th CSI International Symposium on Artificial Intelligence and Signal Processing (AISP 2012), Shiraz, Fars, 2012, pp. 526-531.
3. M. T. Riasat, M. A. Ahmed, S. Tasin, M. A. Nabil and S. Andalib, "Design and performance analysis for hybrid PV-Diesel-Battery power system for residential area in Dhaka city," 2013 IEEE 39th Photovoltaic Specialists Conference (PVSC), Tampa, FL, 2013, pp. 1515-1520.
4. A. Hossain, "Design and economic analysis of PV-diesel hybrid system for particular section of IUT campus," 2nd International Conference on Green Energy and Technology, Dhaka, 2014, pp. 91-94.
5. H. W. Salih, S. Wang and B. S. Farhan, "A novel GA-PI optimized controller for MPPT based PV in a hybrid PV-diesel power system," 2015 5th International Conference on Electric Utility Deregulation and Restructuring and Power Technologies (DRPT), Changsha, 2015, pp. 1288-1293.
6. D. Rodríguez-Gallegos, K. Rahbar, M. Bieri, O. Gandhi, T. Reindl and S. K. Panda, "Optimal PV and storage sizing for PV-battery-diesel hybrid systems," IECON 2016 - 42nd Annual Conference of the IEEE Industrial Electronics Society, Florence, 2016, pp. 3080-3086.
7. M. Mahmud and R. E. Blanchard, "Assessing a rural electrification program in Malaysia: System performance analysis on 11 solar PV-diesel hybrid systems," 2016 4th International Conference on the Development in the in Renewable Energy Technology (ICDRET), Dhaka, 2016, pp. 1-5.

8. D. Rodríguez -Gallegos et al., "Placement and sizing optimization for PV-battery-diesel hybrid systems," 2016 IEEE International Conference on Sustainable Energy Technologies (ICSET), Hanoi, 2016, pp. 83-89.
9. Shatakshi, Ikhlaq, B. Singh and S. Mishra, "A synchronous generator based diesel-PV hybric micro-grid with power quality controller," 2017 IEEE 26th International Symposium on Industrial Electronics (ISIE), Edinburgh, 2017, pp. 952-956.
10. D. Rodríguez-Gallegos et al., "A Siting and Sizing Optimization Approach for PV–Battery–Diesel Hybrid Systems," in IEEE Transactions on Industry Applications, vol. 54, no. 3, pp. 2637-2645, May-June 2018.
11. J. Mahdi and B. A. Fadheel, "A Modified Algorithm for Economic Evaluation between Diesel-Generator and PV Solar System," 2018 2nd International Conference for Engineering, Technology and Sciences of Al-Kitab (ICETS), Karkuk, Iraq, 2018, pp. 83-87.