JETIR.ORG ISSN: 2349-5162 | ESTD Year : 2014 | Monthly Issue
JOURNAL OF EMERGING TECHNOLOGIES AND INNOVATIVE RESEARCH (JETIR)
An International Scholarly Open Access, Peer-reviewed, Refereed Journal

A device for protection of Farms: A case study

[1] N. L. Sawant, V.P. Khambalkar, [2] P.A. Gawande[3] and K. S. Bhonde[4]

[1]M.Tech. Scholar, Department of UCES & EE Dr. PDKV, Akola
[2]Assistant Professor, Department of Agricultural Engineering Section, Dr. PDKV, Akola
[3]Assistant Professor, Department of Soil and Water Conservation Engineering, Dr. PDKV, Akola
[4]Agricutural Assistant, Department of UCES & EE , Dr. PDKV,Akola

Abstract:

The research work was under taken on "Development of Solar Powered Ultrasonic System for Farms." A Solar powered ultrasonic system was developed consisted of 10 W SPV panel, 12 V; 7 Ah lead acid battery, 8051 microcontroller, PIR sensor, ultrasound and adjustable stand. This study was carried out to see the feasibility of using Passive Infrared Sensor (PIR) to protect crops from birds and animals. PIR sensors are motion detector sensors and operate based on the infrared radiation from the body. The sensor has the advantage of low cost, and it is used extensively in indoor automated motion detection systems. All bodies including human emit infrared radiation and the radiation amount depends on body surface temperature. The proposed system consists of a microcontroller, frequency adjuster, sensitivity adjuster, an ultrasound comprising of lighting. When the birds or animals were in the range of PIR sensor it senses the motion and it gives signal to the microcontroller which gives signal to the ultrasound and ultrasound starts vibrating.

Keywords: Solar panel, Battery, Microcontroller 8051, PIR Sensor, Ultrasound, Relay circuit, Adjustable stand, Birds and animals.

Introduction:

A man with nature is precious. As a matter of advancement research is all along continues. India stands second largest in the world after the United States for having 159.7 million hectares of arable land. Farmers depend on agriculture for their profit in farm areas like cotton, banana, orange, sugarcane, cereals, pulses etc. Maharashtra being an important producer of cotton, sugarcane, groundnut and quite a few horticultural crops. Unfortunately, they are destroyed by pests, insects, birds and animals which causes huge losses to them. It is estimated that around 30 to 40% of crops are destroyed annually due to attacks by wild animals in India. According to the research animals namely boars and deer's are the most common perpetrators of the destruction. In some district of Maharashtra 60% of the crops are destroyed by the deer's and boars claims for which are not payable by insurance companies. Because of animal interference in agricultural lands, there will be huge loss of crops. Deer's and other animals coming in to contact with humans, impact negatively in various

means such as by depredation of crops, damaging grain stores, water supplies, houses and other assets, injuring and death of humans.Farmers in India face serious threats from pests, natural calamities & damage by animals resulting in lower yields. Traditional methods followed by farmers are not that effective and it is not feasible to hire guards to keep an eye on crops and prevent wild animals. Since safety of both human and animal is equally vital. So, animal detection system is necessary in farm areas.Ultrasound has been used as a deterrent technique for animals like monkeys, stray dogs, rodent, birds etc. because of its remarkable features while maintaining cost. The device operates on a frequency band of 10 kHz – 100 kHz. The sound is not pleasant but the volume is well under any level of intensity (loudness, decibels) that would cause injury, whether or not it is "heard." It makes animals leave by making the space uncomfortable, not dangerous. Table 1.1 defines the hearing range of different species of animals on thebasis of their operating frequency range. (Fay, 1988. Hearing in Vertebrates: A Psychophysics Dataook. Wietka, IL: Hill- Fay Associates) Therefore, emitting a frequency closest to the given bands make corresponding animals uncomfortable, making them to leave the area.

Table 1: Hearing range of wild animals

S. N.	Animals	Frequency Range
1.	Birds, Squirrels, Monkeys, Raccoon, Deer, etc.	10-35 kHz
2.	Dog, Cat, Gerbil, Guinea pig, Ferret, Beetles, Ants, Boars, etc.	36-65 kHz
3.	Rat, Mouse, etc.	66-100 KHz

Material and Methods

Development of Solar Powered Ultrasonic System

This system is mainly consisted of solar panel, sealed lead acid battery, microcontroller 8051, PIR sensor, piezoelectric speaker, frame, metal box, adjustable stand.

Solar photovoltaic panel

A 10 watt solar PV panel was used to produce electricity by converting the solar energy into the electrical energy. It is capable of producing sufficient power to perform the work of solar ultrasonic system. Photovoltaic panels containing Multi crystalline Silicon solar cells with outlined below featured could be used in the photovoltaic panel for the solar ultrasonic system. The solar panel could produce rated voltage even under low light exposure. For getting full performance solar panel were oriented towards south direction. (Gavhande, 2018)

Sealed lead acid battery

A 12 V, 7 Ah sealed lead acid battery is used for the storage of electrical energy generated by the solar panel. The charged battery was used to operate the system. There are two types of storage batteries are available in the market 1. Lead acid battery and 2. SMF (Sealed maintenance free lead acid battery) having charging capacity 12 V 7 Ah. According to available power source 12 V, 7Ah sealed lead acid battery was selected having no maintenance (Gavhande, 2018).

8051 Microcontroller

Fig 1: Solar Panel

Fig 2: Sealed lead

8051microcontroller was designed by Intel in 1981. It was an 8-bit microcontroller. It was built with 40 pins DIP (dual inline package), 4kb of ROM storage and 128 bytes of RAM storage, 2 16-bit timers. It consists of four parallel 8-bit ports, which are programmable as well as addressable as per the requirement. An on-chip crystal oscillator was integrated in the microcontroller having crystal frequency of 12 MHz (Kumar, 2017).

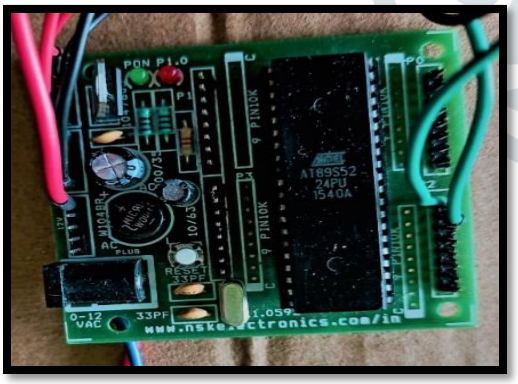

Fig 3:8051Microcontroller

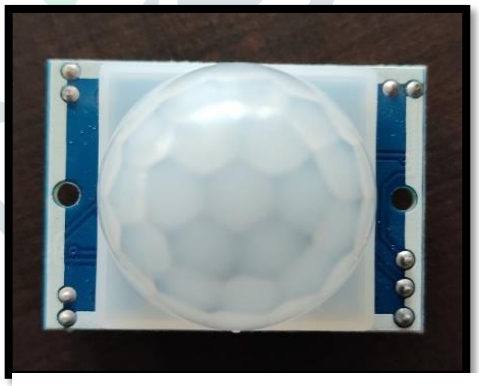

Fig 4: PIR Sensor

PIR Sensor

A passive infrared sensor (PIR sensor) is an electronic device that measures infrared (IR) light radiating from objects in its field of view. Apparent motion is detected when an infrared source with one temperature, such as a human, passes in front of an infrared source with another temperature, such as a wall. PIR sensor detects a human being moving around. The range of this sensor was about 10 to 15 meter (Vikram, 2017).

Piezoelectric speaker

The Piezoelectric speaker is known by quite a few names, piezo, buzzer and crystal loudspeaker are just some of them. In its essence, it is a speaker that uses a piezoelectric effect to generate the sound. By applying a voltage to a piezoelectric material, it creates the initial mechanical motion. Furthermore, diaphragms and resonators typically convert the motion into audible sound. Piezoelectric speakers

Frame

The entire system was set on a strong metallic frame, which was able to withstand the total load of assembly. There was a provision of three height adjustments so as to enable adjustingheight as per the requirement of the crop.

Adjustable leg support

A stand is portable frame, used as platform for supporting the weight and maintaining the stability of the ultrasonic device. A stand provides stability against downward forces and horizontal forces and movements about horizontal axes. It is provided with adjustable screw to maintain the height of device according to height of crop.

Working of Solar Powered Ultrasonic System

In this system solar power supply and battery supply was used to provide input to the circuit. The bridge D1 was used for conversion of AC supply to DC supply. The capacitor C3 of 100 uf and capacitor C4 of 1u was used to filter out frequency otherwise series of frequencies from an electronic circuit. Generally capacitor Pin1 corresponds to the drain terminal of the device, which should be connected to the positive supply 5V DC. Pin2 corresponds to the source terminal of the device, which should be connected to the ground terminal via a 100K or 47K resistor. The Pin2 is the output pin of the sensor, and the detected IR signal is carried forward to an amplifier from the pin 2 of the sensor. Pin3 of the sensor is connected to the ground.

In this system solar power supply and battery supply was used to provide input to the circuit. The bridge D1 was used for conversion of AC supply to DC supply. The capacitor C3 of 100 uf and capacitor C4 of 1u was used to filter out frequency otherwise series of frequencies from an electronic circuit. Generally capacitor filters out the signals which have low frequency. So this capacitor was used to filter unwanted frequencies. The IC 7805 was used for voltage regulator. The voltage regulator was 5V. The 8051 microcontroller was used. For developing this microcontroller New Version Keal programming software was used and programming language was C- language. A push button was used which is connected to reset pin of microcontroller. For this resistance R1 (8.2 K) and capacitor C5 (1u) was used. Push button was used for reset the microcontroller. External crystal oscillator was used in which Y1 crystal frequency was used. Two capacitor C1 and C2 of 22 pF of 11.0592 MHz wasused. The power supply (Vcc) of 5 volt was provided to microcontroller. The PIR sensor was connected to IC pin 28 port 2.7. The PIR sensor was operated on 5 V. The relay module was connected to pin 27 port 2.6 which was operated on 12 V supply. The ultrasound was connected to the relay circuit. When microcontroller was start the PIR sensor connected to IC pin 28 port 2.7 senses the motion and when it sense the

it was activated and gives signal to the relay module which was connected to pin 27 port 2.6 which was activated. The ultrasound which was connected to the relay module starts vitiating.

Results and Discussions

Performance Evaluation of Solar Powered Ultrasonic System

Laboratory testing of solar powered ultrasonic system

The laboratory testing of developed solar powered ultrasonic system was conducted at Dept. of UCES & EE, Dr. PDKV Akola to test different operating parameters like battery charging and discharging behaviour.

Battery charging behaviour of solar powered ultrasonic system

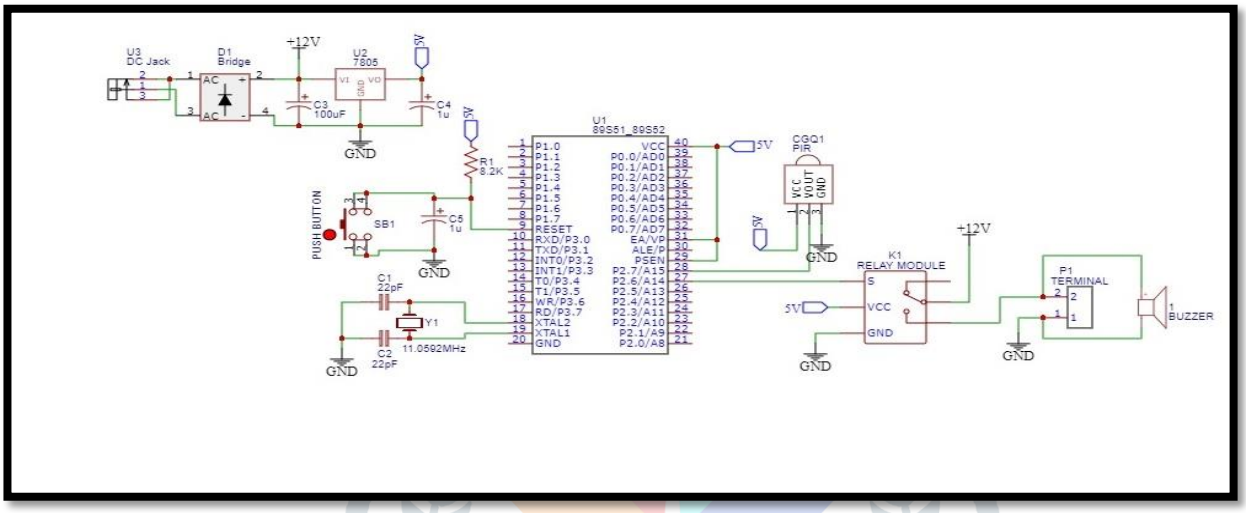

Fig. 5: Circuit diagram of ultrasonic system

The battery charging behaviour was carried out at no load. The testing was carried out at Dept. of UCES & EE, Dr. PDKV Akola.

Various parameters like solar intensity, wind velocity, ambient temperature, panel voltage, panel current, battery voltage and battery current were measured during no load testing.

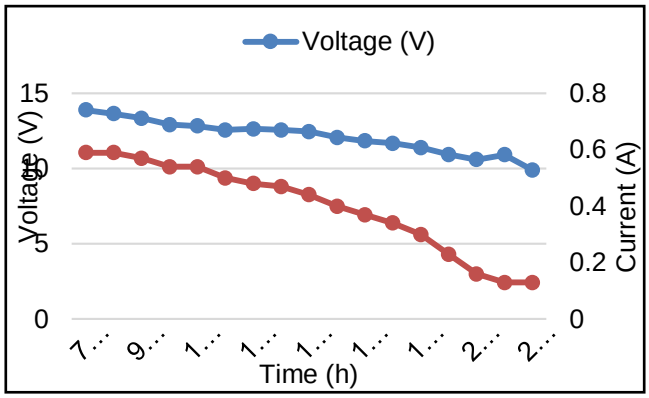

Fig.6 Battery discharging behaviour of solar powered ultrasonic system

Fig. 7 Field border sharing with forest

The variation of battery voltage, panel voltage corresponding solar intensity with time is shown in Fig. 8

It was observed that the panel voltage increased with the increase in solar intensity. The battery was fully charged within 8 hours at the voltage of 13.9 V at the time of 16.00 h. similar investigation were conducted by Gavhande 2018.

The battery discharging characteristics of solar powered ultrasonic system was studied to determine the discharge time of battery.The variation of battery voltage and current with respect to time and corresponding power of solar powered ultrasonic system is shown in Fig 6. It was observed that the charged battery (13.9 V) of solar powered ultrasonic system, the battery voltage reduces gradually up to 9.9 V. The average operating time of solar powered ultrasonic system was found to be 12 hours.

It was revealed that the use of only battery as a power source reduced the efficiency of overall system due to gradual reduction operating voltage. Similar investigation were conducted by Gavhande 2018.

Field testing of solar powered ultrasonic system

The field testing was done at Soybean field, Dept. of Agronomy, Dr. PDKV Akola. Fig 7 shows the picture of a soybean field surrounded by forest where the system was tested. While trying to install the system, it was observed that the field borders need to be considered; the field border shared with the forest. At these field device was installed to take the performance on the birds and animals. The solar powered ultrasonic system was tested in the field to evaluate the performance on the peacocks at the time of 6:00 am to 8:00 am in the morning and 5:00 pm to 7:00 pm in the evening and for evaluating the performance of system on the animals the night time was considered. The detection range of the PIR sensor used in the study was 7-8 meters maximum.

The sensor has some delay in activating the lighting and ultrasound system after it gets activated. The range of ultrasound was 20 meter. The systems were installed as shown in the Fig. 7. The system wasplaced at some distance away from the field border. The sensor gets activated when the birds and animals was within 7 m from the sensor. The output generated from the sensor turns ON the light and ultrasound for the 10 to 12 seconds before the birds and animals reach the field border. This could chase them back to the forest.

The following observations were taken in the soybean field of 625 m^2.

Table 2: Number of peacocks in the field after installing the device

S.N	Date	Time	No. of peacocks in the field after installing the device
1	21/06/2021	6 to 7	3
		7 to 8	4
		17 to 18	5
		18 to 19	6
2	22/06/2021	6 to 7	2
		7 to 8	0
		17 to 18	1
		18 to 19	5
3	23/06/2021	6 to 7	4
		7 to 8	3
		17 to 18	2
		18 to 19	3
4	24/06/2021	6 to 7	1
		7 to 8	0
		17 to 18	2
		18 to 19	3
5	25/06/2021	6 to 7	1
		7 to 8	3
		17 to 18	4
		18 to 19	2

Effectiveness index of the solar powered ultrasonic system

$$\text{Effectiveness Index} = \frac{\text{No. of peacocks reduced after installing the device}}{\text{No. of peacocks before installing the device}}$$

$$= \frac{188}{242}$$

$$= 0.77$$

Conclusion

It was concluded that the maximum efficiency of 10 W solar panel was found to be 14.25 %. It was concluded that the maximum energy efficiency of 10 W solar panel was found to be 15.30%.

It was observed that the maximum working hours of solar powered ultrasonic system was 10-13 hours. It was observed that battery was fully charged in 6 hour with the help of SPV panel.

It was observed that the maximum working hours of solar powered ultrasonic system was 10-13 hours. It was observed that battery was fully charged in 6 hour with the help of SPV panel.

It was concluded that the total wattage required for system was 120 watt. It was concluded that 1 battery and 1 solar panel was sufficient to operate the system. The effectiveness index of the system was observed to be 0.77. It was observed that the range of PIR sensor was 7 to 8 meter. It was observed that the range of ultrasound was 20 meter. The birds and animals were repelled by solar powered ultrasonic system up to the 20 m.

References

Andavarapu N, Valli Kumari Vatsavayi 2017, "Wild-Animal Recognition in Agriculture Farms Using W-COHOG for Agro- Security", "International Journal of Computational Intelligence Research", ISSN 0973-1873 Volume 13, pp. 2247-2257.

Baral S. S., R. Swarnkar, A. V. Kothiya, A. M. Monpara and S. K. Chavda. 2019. Bird Repeller – A Review. *International Journal of Current Microbiology and Applied Sciences*, 8(2): 1035-1039.

Bhamre, V., Sarkate, M.B., Wadnerkar, D.W. and Ramtake, R.T. 2005. A solar light Trap for monitoring and controlling of insect pests of cotton, *In*: National Conference on Applied Entomology, Udaipur, September 26-28, 2005. pp 20-21.

Fay, R. R. 1988. Hearing in Vertebrates: A Psychophysics Dataook. Wietka, IL: Hill- Fay Associates

Gavhande 2018. Development and Evaluation of Solar Photovoltaic Insect Light Trap. Unpublished Thesis.

Kumar 2017 Upgraded Ultrasonic Animal Deterrent Device, Department of Electronics and Communication Engineering Dehradun Institute of Technology. Dehradun: 248009, India.

Rawat P 2017. Exergy Performance Analysis of 300 W Solar Photovoltaic Module. International Journal of Engineering Sciences & Research Technology, Vol 6(3).