JETIR.ORG ISSN: 2349-5162 | ESTD Year : 2014 | Monthly Issue

JOURNAL OF EMERGING TECHNOLOGIES AND INNOVATIVE RESEARCH (JETIR)

An International Scholarly Open Access, Peer-reviewed, Refereed Journal

Electric Vehicle to grid power flow in a microgrid using level 3 DC rapid charging

[1]Chandan Verma,[2] Naveen Kumar Tadikonda, [3]R. N. Mahanty
[1]M.tech. Student, [2]PhD Scholar, [3]Professor
Department of Electrical Engineering
NIT Jamshedpur, Jharkhand, India
Email-**chandanverma716@gmail.com**

Abstract- In the current era as petroleum prices hike the public goes to EVs as its economic and environmental beneficial quality. As the demand of EVs are increasing so there are also increase the requirement of power demand. EVs battery can be used as an energy storing device in a microgrid. When there is efficient energy then the grid supplies electricity to the EVs and whenever energy is required then EVs supply the electricity to the grid. A proper fuzzy logic controller and control system is deployed to be implemented to realize this concept. For implementing this concept in microgrid level three fast charging is presented in this paper. A micro-grid test system with a dc fast charging station for interconnection EVs is modeled. EV2G-G2EV power transfer is demonstrated through simulation studies. The results of the tests show that EV batteries can actively regulate power in the microgrid using G2EV-EV2G modes of operation. The charging station's design ensures that grid injected current has minimal harmonic distortion, and the Fuzzy logic controller provides good dynamic performance as compared to PI control in terms of DC bus voltage stability.

keywords- **Electric vehicle, DC quick charging station, Microgrid, Fuzzy logic controller, Grid-connected inverter**

I. INTRODUCTION

Electric vehicles are becoming more popular as a result of their lower emissions and less reliance on fossil fuels. Storage technologies are critical components of a microgrid because they allow intermittent renewable energy sources to be integrated. When electric car (EV) battery packs are integrated in for charging, they can be used as efficient storage devices in micro-grids. Per a national household survey, 90 percent of vehicles are parked in a parking lot for 5 to 6 hours, so workplace charging encourages vehicles in the grid (EV2G) charging. During that time EVs battery can be used as an idle asset. When there is a sufficient amount of energy (G2EV) and when there is deficient energy then supply back to the grid (EV2G). Integration of EVs to grid power grid faces lots of issues such as it is tough to control, needing a very huge number of EVs and is difficult to achieve in the short term. In this underplot, EV2G is simple to implement in the microgrid.

As the Automotive society Engineers defines there are three levels of charging. Firstly, they define as AC and DC type charging stations according to the ability of power supply and then categorize as levels of charging stations. All AC type charging stations are On-board charging stations and DC type charging station is Off board. AC Level 1 charging supply's single-phase AC voltage range from 120V to 240 V and the current rating is 16A. This is the slowest form of charging it required 7hr to charge EVs for going less than 60km a day. Level 2 charging used for public or household stations provides power 20kW at 200V or 240V and up to 80A [2]. DC Level 3 charging is a quick charging station that provides power up to 240Kw at 200/600V current less than 400A. Reduced the charging time up to20-30 min. Level 3 DC charging station is used to implement EC2V in microgrids as their easy energy transfer quality when EVs are used as a power storage device. In previous studies EV to grid was implemented using DC fast charging and their charging/discharging control scheme is designed using PI controller [3]. Inverter control was also designed using a pi controller. In this paper, we develop a Fuzzy logic controller for charging/discharging and an inverter control scheme.

II. CHARGING STATION FRAMEWORK FOR ELECTRIC VEHICLE TO GRID POWER FLOW

Reducing the charging time is the key goal for making EVs user-friendly. Fast DC charging presents an intriguing opportunity in this context. When designing the charging station's circuit, a variety of factors must be considered. In this chapter Proposed and developed models of an electric car charging station for rapid DC charging. The bi-directional charging system is shown in fig.1. The electric vehicle interface with the dc-dc converter is shown in the diagram [4]. A grid-connected inverter (GCI) links the dc bus to the grid through an LCL filter and a step-up transformer. A single DC bus feeds the charger to an electric vehicle.

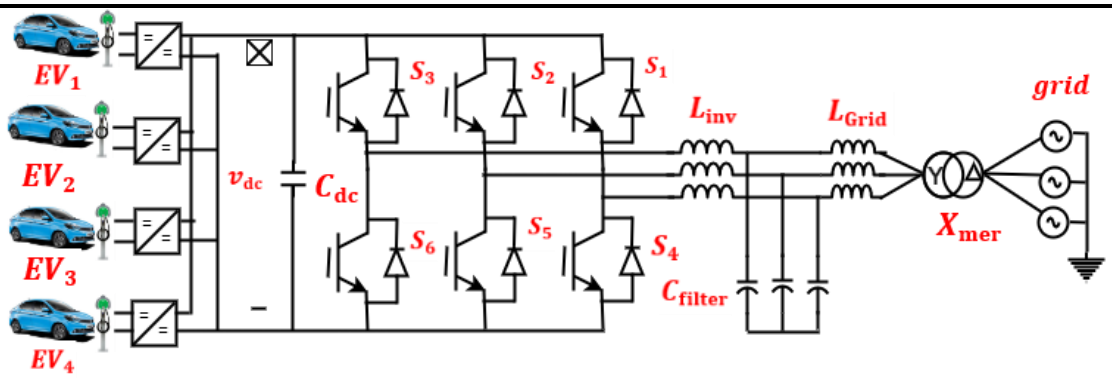

Fig.1. DC fast charging station for EV

A. EV battery charger

In DC fast charging charger is located outside the car. The basic building block of an off-board charging station with V2G capability is a two-way dc-dc converter. A two-way dc-dc Power converter can be transferred in either direction between two dc sources using dc-dc converters. Because of their ability to change the direction of current flow and thus while maintaining the polarity of the voltage at either end. Despite the fact that they have remained unchanged, they are increasingly being used in applications. Such as dc uninterruptible power supplies, battery charger circuits, and so forth. Computer power systems and telecom power supplies. Battery charger interconnects EV battery system and DC distributed grid. The DC-DC converter is shown in fig.2. It has two MOSFET/ IGBT switches which are working in complementary form.

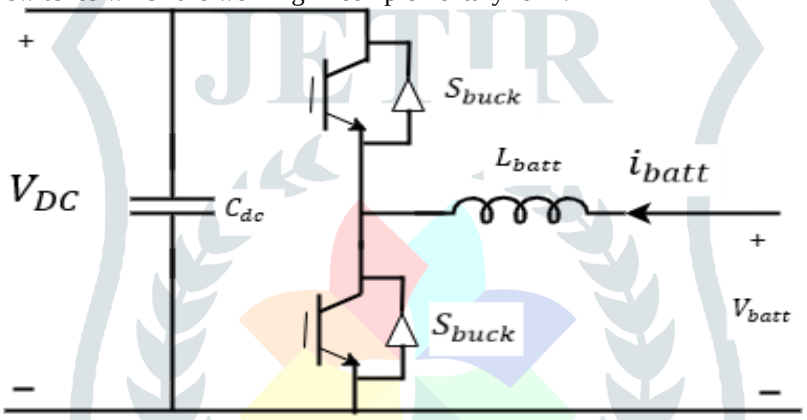

Fig. **Error! No text of specified style in document.**. Bi-directional EV Battery charger

B. LCL filter and Inverter

Three half-bridge switches make up a three-phase voltage source inverter (VSI), and each half-bridge switch produces a sinusoidal voltage waveform for each phase. In this paper for modeling of simplicity and educational purpose the inverter design. The unfiltered output of the power bridge appears as a pulse width modulated voltage waveform when each half-bridge is switched according to the selected PWM method. A filter is required to generate sinusoidal voltage waveforms and to transfer power to the grid in a controlled manner.

III. CONTROL SYSTEM

A. Battery charging control

A constant current control approach is used for discharging and charging of electric vehicle batteries. As shown in fig.3. firstly compares battery reference current with 0 to find the polarity. The reference value of battery current is obtained by taking active power balance on the vehicle side, neglecting all losses. The polarity will decide the mode of operation either charging or discharging. Once the mode of is decided measured current is compared with the reference current and the error signal is passed through the fuzzy logic controller (FLC) to produce the switching pulses for S_{buck} and S_{boost} switches. In discharging mode S_{buck} is off and in charging mode S_{boost} is turned off.

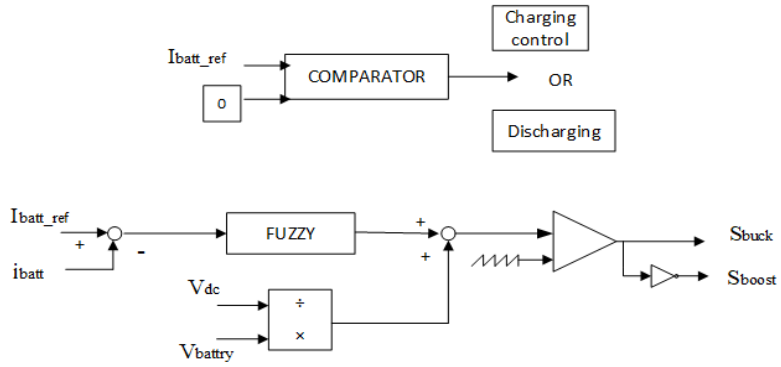

Fig. **Error! No text of specified style in document.**. Constent current control battery charging using FLC

B. Inverter control

For the inverter controller, A synchronous reference frame cascade control is presented. Fig.4. depicts the usual vector control employing four fuzzy controllers in a layered loop. Its structure has two outer control loops and two inner control loops. Inner control loops control current and outer control loop controls the voltage. Active AC current is controlled by the inner loop control of d axis and the dc bus voltage is controlled by the outer loop control of the d-axis. Likewise, passive ac current is controlled by q-axis inner loop and by adjusting reactive current ac voltage magnitude is regulated q-axis outer loop. Also, to boost performance during transients dq decoupling terms wL and feed-forward voltage signals have been included.

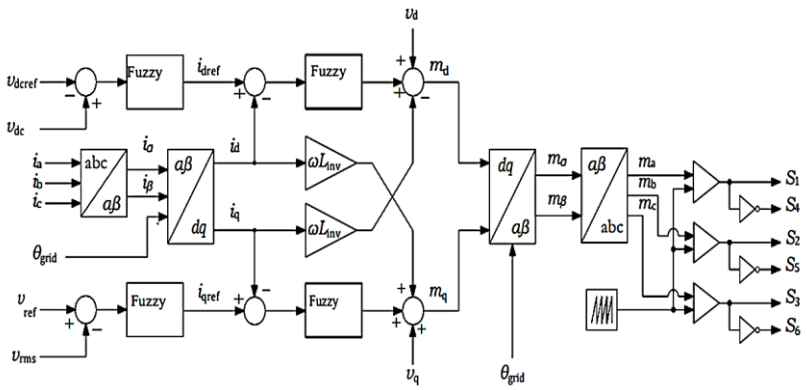

Fig. 4. Block diagram of charging station inverter control system

IV. MICROGRID TEST SYSTEM CONFIGURATION

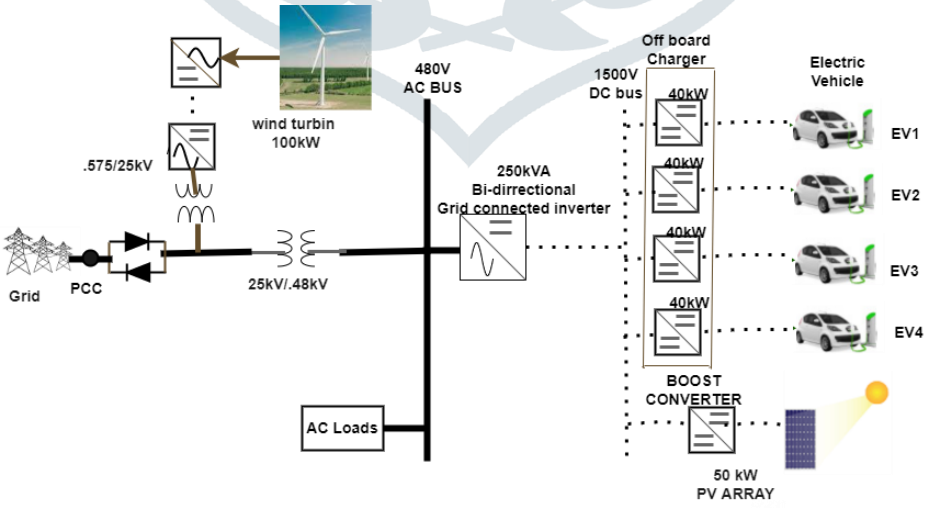

Fig.5. Microgrid test system configuration

Fig.5. shows the configuration of the micro-grid test system with the dc fast-charging station. The generating sources are a solar PV array (50-KW) and a 100-kW wind turbine (WT) in the system. The test system has a 150kw AC load. PV array 50 kW power generates at its standard condition 25^0 C and 1000 W\m^2 radiation. Four EV batteries are linked to the charging station's 1500V dc bus through off-board chargers to form the EV battery storage system The solar PV is also connected to this dc bus via a step-up converter with a maximum power point tracking (MPPT) controller. The doubly-fed induction generator is powered by

wind turbines is linked with a microgrid at PCC Transformers are used to boost voltage and link ac equipment to the power grid.

V. SIMULATION RESULTS

Table 1: EV Batteries Current Set Point

Time range	0 sec to 1sec	1 sec to 4 sec	4 sec to 6 sec
EV_1 battery current set point	0	+80	0
EV_2 battery current set point	0	0	-40

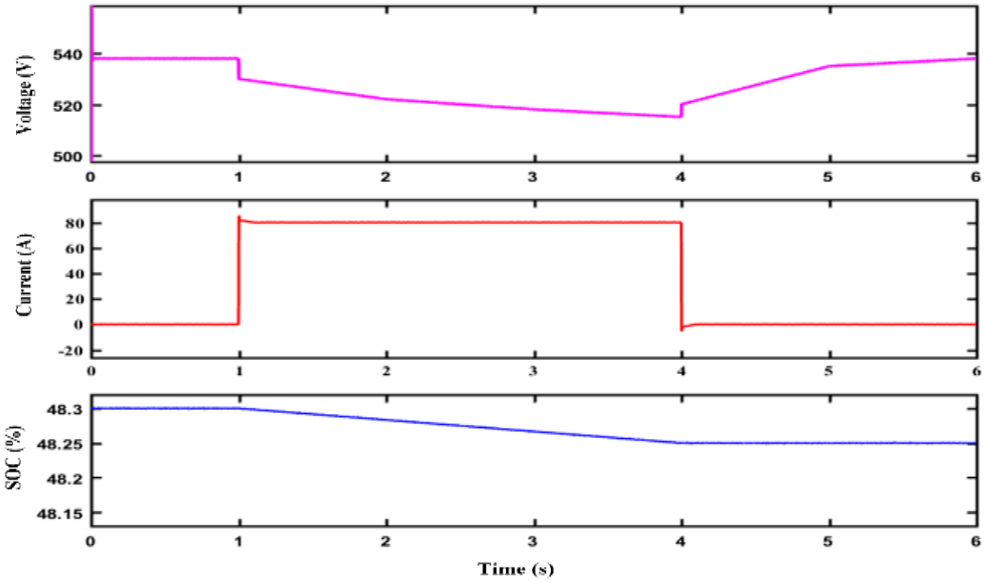

Fig.6. During EV2G operation battery Voltage, Current and SOC of EV1

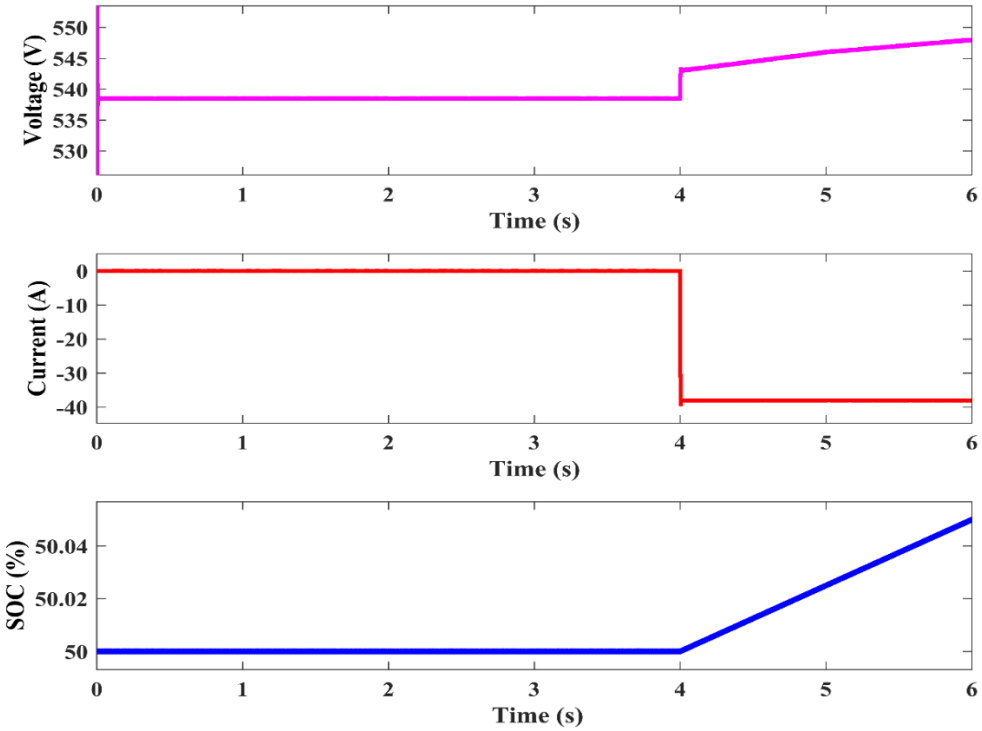

Fig.7. During G2EV operation battery Voltage, Current and SOC of EV2

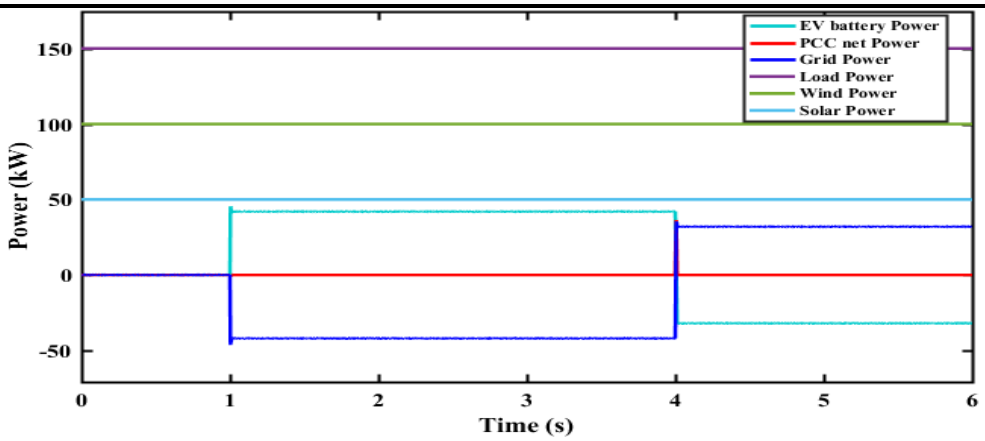

Fig. 1. Various components in the Microgrid system in the term of active power profile

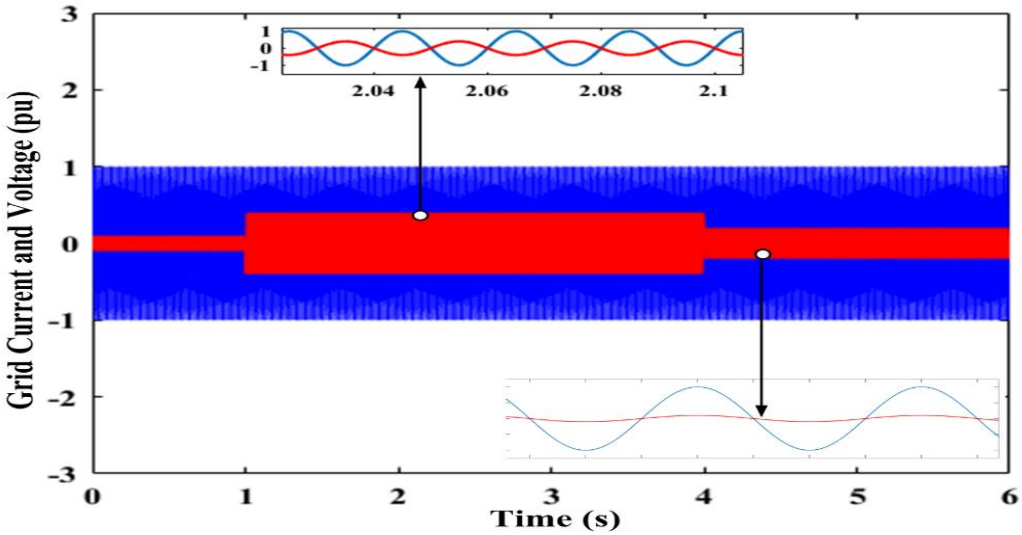

Fig.8. Grid injected current and voltage

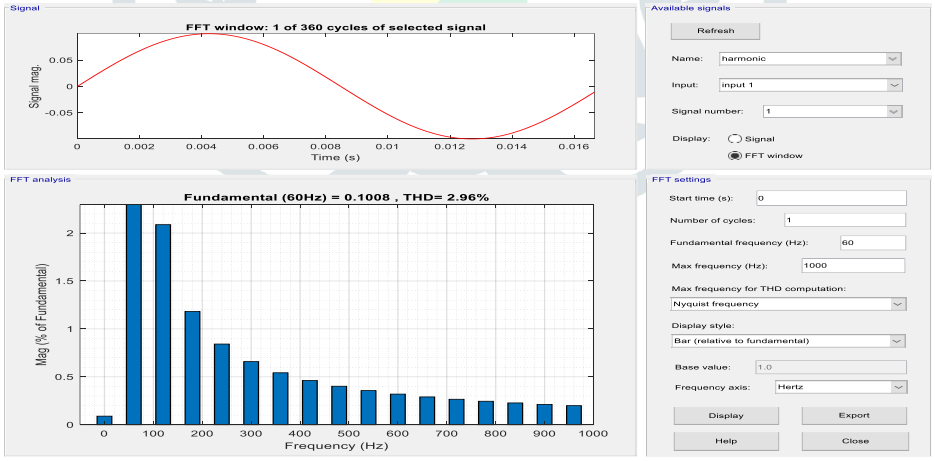

Fig.9. Grid injected current THD using FLC

CONCLUSIONS

This paper presents the modelling and design of integrating the charging station to the microgrid. Power transfer from vehicle to grid and grid to the vehicle in a microgrid uses dc quick charging station methodology. For linking EVs to microgrid DC charging station with off-board charger and grid connected inverter (GCI) created. Designed power electronic interface's control mechanism permits bi-directional power transmission between the utility grid and EVs. The simulation findings reveal a seamless energy transfer between the EVs and the utility grid, with grid injected current meeting the appropriate criteria. The designed fuzzy logic controller Z gives good dynamic operation characteristics in the sense of DC bus stability and monitors active power references This thesis examines the microgrid's active power regulation elements. Also, compare the performance analysis of THD using pi and fuzzy controller. According to IEEE std, 1547 THD should be less than 5%. Using PI controller, we get 3.96% Grid injected current THD, and using FLC controller we get 2.16% grid injected THD.

REFRENCES

[1] C. Shumei, L. Xiaofei, T. Dewen, Z. Qianfan, and S. Liwei, "The construction and simulation of V2G system in micro-grid," in Proceedings of the International Conference on Electrical Machines and Systems, ICEMS 2011, 2011, pp. 1–4.

[2] S. Han, S. Han, and K. Sezaki, "Development of an optimal vehicle-togrid aggregator for frequency regulation," IEEE Trans. Smart Grid, vol. 1, no. 1, pp. 65–72, 2010.

[3] M. C. Kisacikoglu, M. Kesler, and L. M. Tolbert, "Single-phase on-board bidirectional PEV charger for V2G reactive power operation," IEEE Trans. Smart Grid, vol. 6, no. 2, pp. 767–775, 2015.

[4] A. Arancibia and K. Strunz, "Modeling of an electric vehicle charging station for fast DC charging," in Proceedings of the IEEE International Electric Vehicle Conference (IEVC), 2012, pp. 1–6.

[5] K. M. Tan, V. K. Ramachandaramurthy, and J. Y. Yong, "Bidirectional battery charger for electric vehicle," in 2014 IEEE Innovative Smart Grid Technologies - Asia, ISGT ASIA 2014, 2014, pp. 406–411.