JETIR.ORG ISSN: 2349-5162 | ESTD Year : 2014 | Monthly Issue
JOURNAL OF EMERGING TECHNOLOGIES AND INNOVATIVE RESEARCH (JETIR)
An International Scholarly Open Access, Peer-reviewed, Refereed Journal

"Design and Implementation of Solar based Fruit and Vegetable Harvesting Device"

[1]Huliraja, [2]Dr. S G Srivani
[1]M.Tech. Student, [2]Professor and Associate PG Dean,
[1]EEE Department of RVCE Bengaluru, Karnataka, India
[2]EEE Department of RVCE Bengaluru, Karnataka, India

Abstract: In recent days, the continuous use of non-renewable energy sources has resulted in global energy crisis and created in need of an alternative energy source. Solar energy with the features of being clean, reliable, sustainable, environment friendly, abundant is considered as a substitute for alternative energy source. The selection of appropriate machine drive plays a vital role in reliable and enhanced performance of the system. Solar based motorized fruit and vegetable harvesting device has helped farmers to overcome all the problems like unavailability of labours, damaging of fruit because of hand touching or picking etc. The design of solar based motorized fruit and vegetable harvesting device insisting of dc motor couple with blades helps to cut the pit of the fruit or vegetable during harvesting. The speed of the motor to be varied by using speed driver, as different fruit or vegetables need different speed based on the strength of the pit. The device also consists of an expandable stick which has a push button which can be used to adjust the length of the stick for the required height because the fruits are at found at different heights. With use such a device farmers can harvest faster than previously used manual harvesting methods. The solar based motorized fruit and vegetable harvesting device must be designed and developed to overcomes the abnormal noise. The proposed device is to be simulated using MATLAB tool and the hardware prototype module is to be realized to runs the device with adjustable variable speed, suitable for the sustainability and adaptability with the social concern. The testing needs to be carried out for the effective results with the development of a test bench.

Index Terms – Battery, Rectifier, MPPT, DC Motor, Speed controller.

1. INTRODUCTION

The agriculture industry has many problems, including the decreasing number of farm workers and increasing cost of fruit harvesting. Saving labor and scale up in agriculture is necessary in solving these problems. In recent years, the automation of agriculture has been advancing for labour saving and large-scale agriculture. However, much of the work in the field of fruit harvesting is manually done. The position of the detected fruit and fruit harvesting by the end effector without damaging target fruit and its tree. The continuous use of non-renewable energy sources results in global energy crisis and creates in need of an alternative energy source. Clean energy policies and competitive renewable energy markets are the driving factors in the selection of an alternative energy source [1-2]. A drastic reduction in the cost of power electronic devices and SPV array encourages the researchers and the industries to utilize the solar PV array generated power as an alternative energy source for different applications. Solar energy is an ideal form of energy with the features of being clean, reliable, environment friendly, abundant and substitute of dwindling energy sources [3-4]. In day-to-days life fruit damage is the vital problem facing by farmer 's. It occurs in various ways while picking, by using sharp edge material like scissors, blade, knife etc., by picking manually the fruits get damaged by falling down that's a permanent damage or the labour can fell down in case of shrubs or tall trees. Current forms of harvesting include shaking the trees by hand, climbing the trees and using ad-hoc pickers made out of scrap material. To ensure the fruit is not damaged during picking, fruit picker was designed. Now days the manual picking is more complex during high height, they get damaged easily. Hence it contributes to decrease in production of fruit and thus the fruit cost is increased in market. Therefore, the consumer needs to pay more to buy a fruit. To overcome this problem the fruit picking stick is designed. Depending upon the type of fruit tree, their growth is maximum up to 12-15eet. So, we need to design the stick for 13 feet. During the lifting by human their height also needs to include it. Average height of the human is 5 feet. Human can maximum lift the stick up to his shoulder that height is 4 feet, include the stick height with it, so totally we obtain 18 feet. It also need concentrate on basket rather than height to obtain without damage fruit. The basket should be mounted in top the stick. The basket should with stand the weight of the fruit and gravitational force. The gripper is needed to provide a necessary cutting force. The blades are used to cut the fruit. Selection of blades because of high strength to cut any type of fruit steam. Here we use one of the new type mechanisms for extending the pipe like telescopic model. The device should be convenient operation and easy maintenance.

1.1 Battery:

The electric battery is a source of electric power consisting of one or more electrochemical cells with external connection for powering electrical devices. When a battery is supplying electric power, its positive terminal is the cathode and its negative terminal is the anode. The terminal marked negative is the source of electrons that will flow through an external electric circuit to the positive terminal. When a battery is connected to an external electric load, a redox reaction converts high-energy reactants to lower-energy products, and the free-energy difference is delivered to the external circuit as electrical energy. Historically the term "battery" specifically referred to a device composed of multiple cells; however, the usage has evolved to include devices composed of a single cell. Primary (single-use or "disposable") batteries are used once and discarded, as the electrode materials are irreversibly changed during discharge; a common example is the alkaline battery used for flashlights and a multitude of portable electronic devices. Secondary (rechargeable) batteries can be discharged and recharged multiple times using an applied electric current; the original composition of the electrodes can be restored by reverse current. Examples include the lead-acid batteries used in vehicles and lithium-ion batteries used for portable electronics such as laptops and mobile phones.

1.2 MPPT Charge controller:

The Power Point Tracker is a high-frequency DC to DC converter. They take the DC input from the solar panels, change it to high-frequency AC, and convert it back down to a different DC voltage and current to exactly match the panels to the batteries. MPPT's operate at very high audio frequencies, usually in the 20-80 kHz range. The advantage of high frequency circuits is that they can be designed with very high-efficiency transformers and small components. The design of high-frequency circuits can be very tricky because of the problems with portions of the circuit "broadcasting" just like a radio transmitter causing radio and TV interference. Noise isolation and suppression becomes very important.

1.3 DC Machine:

A DC motor is an electrical machine that converts electrical energy into mechanical energy. In a DC motor, the input electrical energy is the direct current which is transformed into the mechanical rotation. In this session, let us know what is a DC motor, types of DC motor and their applications.

- Self-Excited DC Motor
- Separately Excited DC Motor

Now, let us discuss the various types of DC Motors in details.

- Shunt wound DC motor
- Series wound DC motor
- Compound wound DC motor

1.4 Rectifier:

A rectifier is an electrical device that converts alternating current (AC), which periodically reverses direction, to direct current (DC), which flows in only one direction. The reverse operation is performed by the inverter. The process is known as rectification, since it "straightens" the direction of current. Physically, rectifiers take a number of forms, including vacuum tube diodes, wet chemical cells, mercury-arc valves, stacks of copper and selenium oxide plates, semiconductor diodes, silicon-controlled rectifiers and other silicon-based semiconductor switches.

1.5 Speed controller:

A PWM circuit based on timer NE555 is the heart of this circuit. NE555 is wired as an astable multivibrator whose duty cycle can be adjusted by varying the POT R1. The output of IC1 is coupled to the base of transistor Q1 which drives the motor according to the PWM signal available at its base. Higher the duty cycle the average voltage across motor will be high which results in higher motor speed and vice versa.

2. BLOCK DIAGRAM:

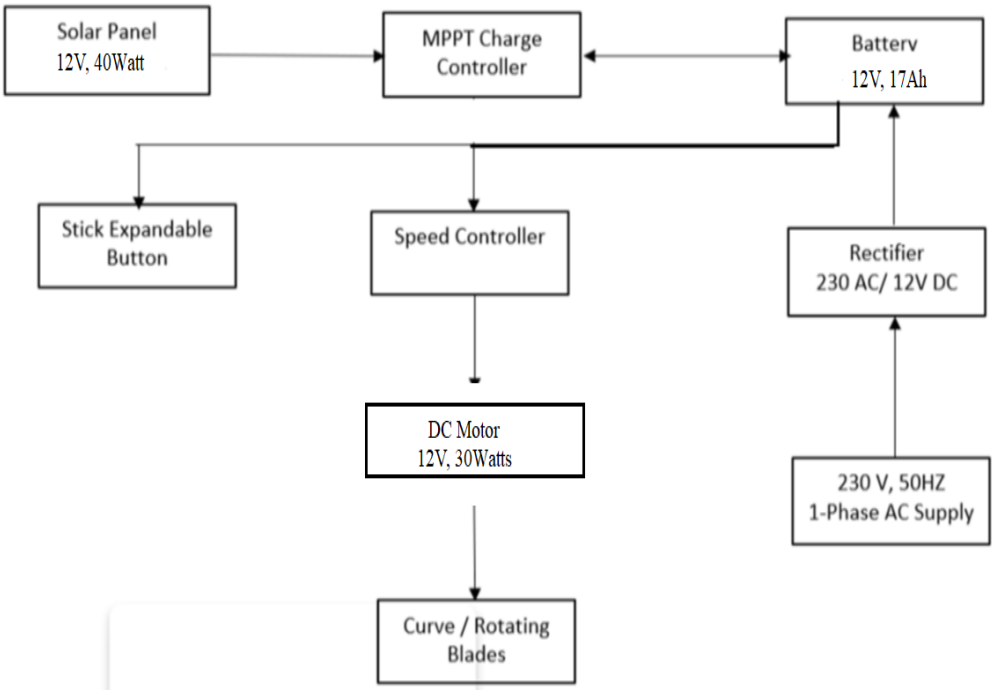

Fig.2.1. Block Diagram of proposed module.

2.1 Schematic diagram

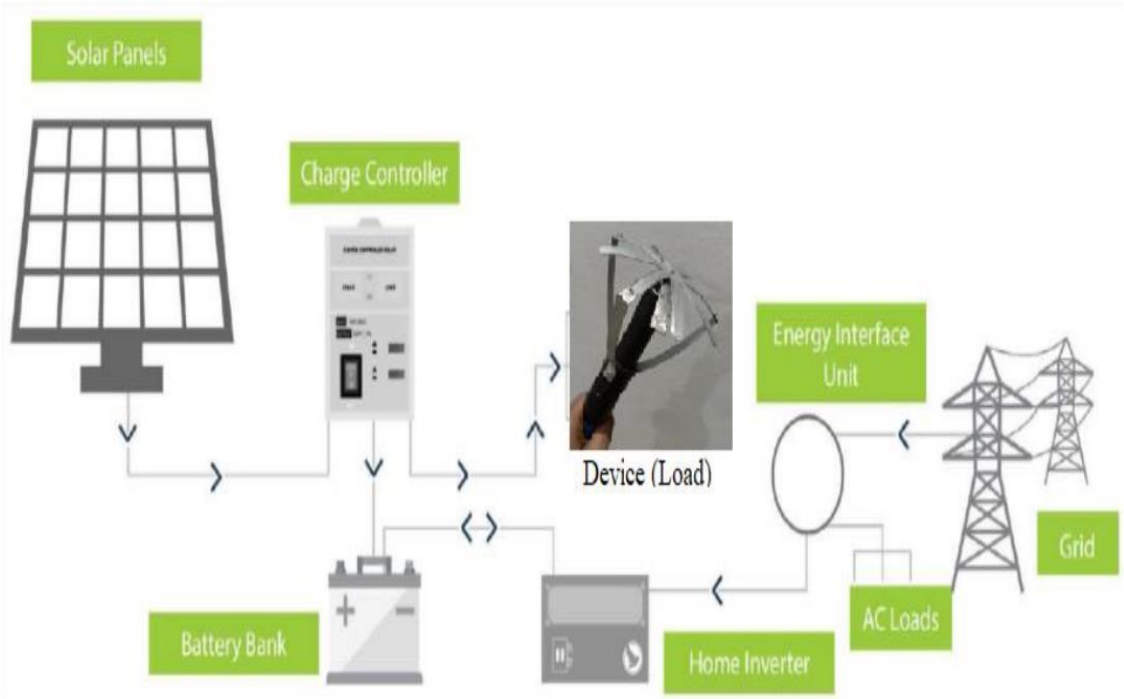

Fig.2.2. Schematic diagram of solar based Motorized fruit and vegetable harvesting device.

3. WORKING OF PROPOSED MODULE AND METHODOLOGY:

3.1 Working:

Independent mode with the battery which is charged by the solar power, to supply the operating system, solar power can be used directly for both the operating system and charging the battery during the high irradiance, if the panels are structured suitably near the harvesting area, during cloudy or unavailability of enough solar irradiance to charge the battery at all battery can be charged with the conventional grid for sustainability. During times when the solar panels are not able to supply power due to cloudy or rainy days, provision is made to connect conventional 230V 50 Hz AC so that the battery charging is maintained regularly. The AC voltage needs to rectified first to charge so a rectifier is used that will convert the 230 V AC supply into 12V DC supply suitable to charge the battery. The system has multiple components like, Speed controller, 25W DC machine, Expandable button and blades, to control the speed of the motor, a speed controller will be designed and placed suitably with the display board to vary the speed of the motor according to user demands, speed controller has four different speed steps like Low. Medium, High and Very high. As per requirement of speeds, based on strength of the tip of the fruit/ vegetable the speed will be selected, a metal Stick with expandable button to fix the length to meet the height /distance. DC motor shaft is coupled to the blades to rotate as per the speed section.

3.2 Methodology:

Fig.3.1 Methodology Involved in Implementation of Proposed Work.

- **Planning:** A detailed literature survey is carried out for selecting required topology and comparing with various other topologies.
- **Designing and Selection of Components:** Designing for selected topology i.e., buck boost converter, rectifier and design of maximum output voltage. Selection of the switch and selection of driver Circuit.
- **Simulation & Hardware Implementation:** Simulation of the Design and Implementation of Solar based Motorized fruit and vegetable harvesting device in MATLAB/SIMULINK tool.
- **Testing & Validation:** The simulation and hardware model are tested and valid for various specified condition and verified the results with excepted results.

4. SIMULATION DIAGRAM AND FLOWCHART:

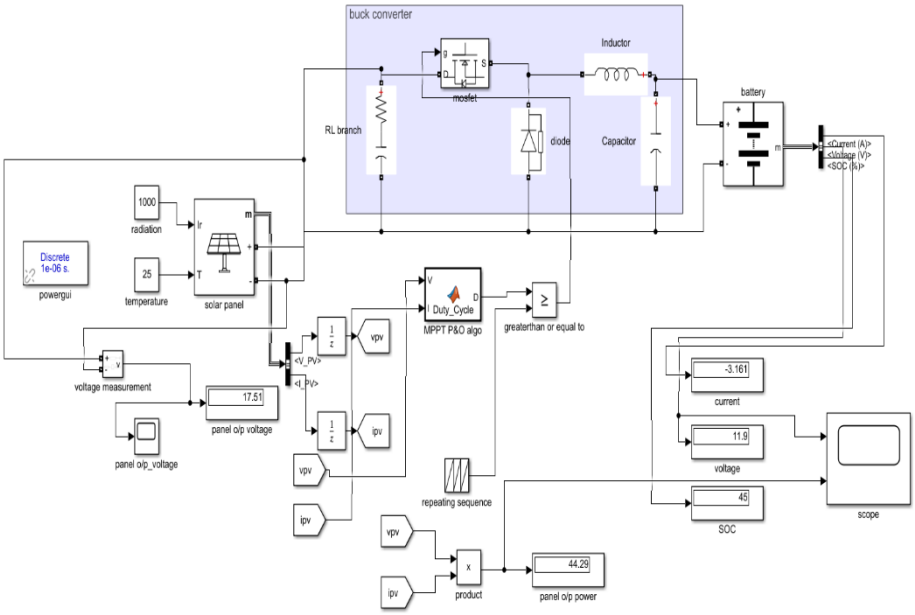

Fig 4.1. Simulation diagram

4.1 Flowchart:

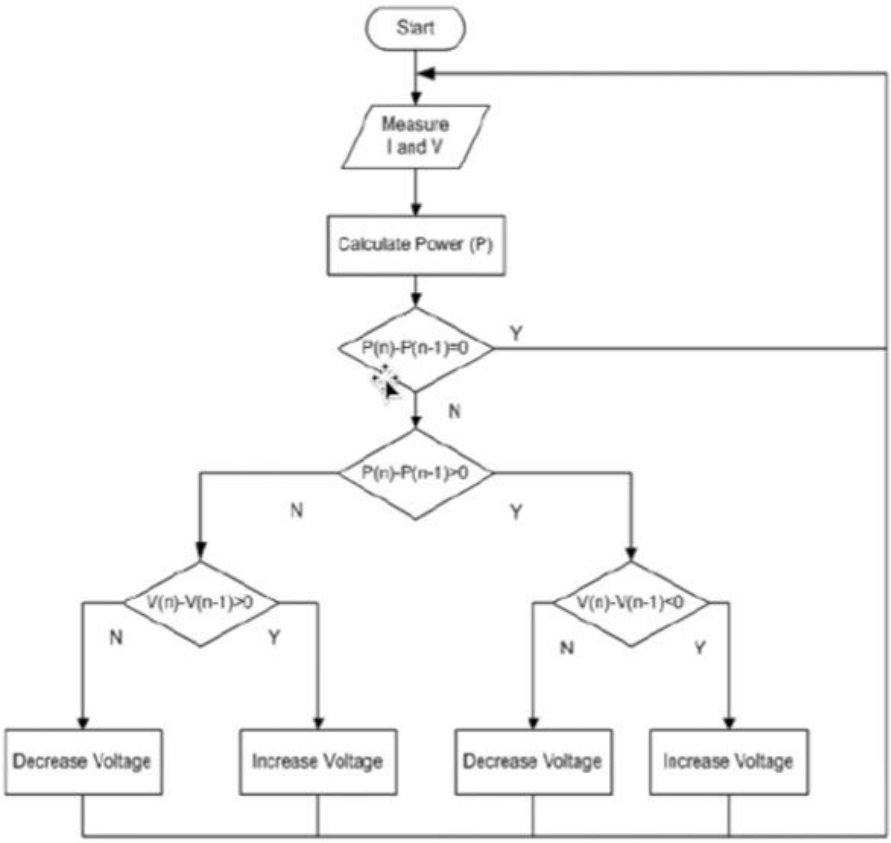

Fig 4.2. Flowchart Diagram

4.2 MPPT Perturb and Observe Method MATLAB Coding:

```
De1D =  0.0001;
persistent Vold Pold Dold;

datatype='double' ;


if isempty(Vold)
    Vold=0;
    Pold=0;
    Dold=Dinit;
end

P=V*I;
dV=V-Vold;
dP=P-Pold;
if dP~=0;
    if dP < 0;
        if dV<0
            D = Dold-De1D;
        else
            D=Dold - De1D;
        end
    else
       if dV < 0
            D = Dold + De1D;
        else
            D = Dold - De1D;
        end
    end
else D = Dold;
        end
    else D = Dold;
    end

    if D >=Dmax || D<Dmin
        D=Dold;
    end
    Dold=D;
    Vold=V;
    Pold=P;
```

5. RESULTS:

5.1 Voltage and Power waveforms:

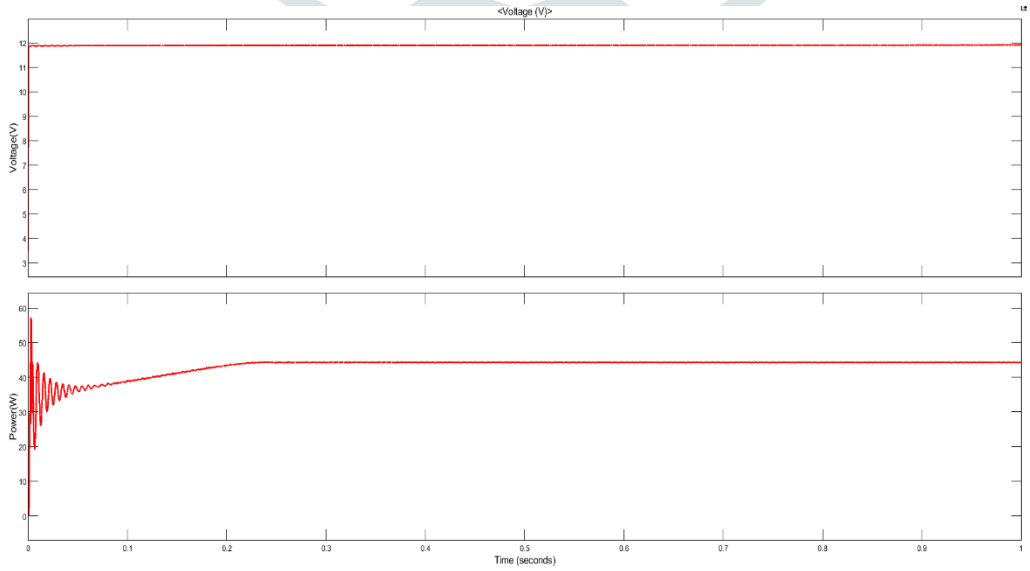

Fig. 5.1 Voltage and Power

5.2 Current and Power waveforms:

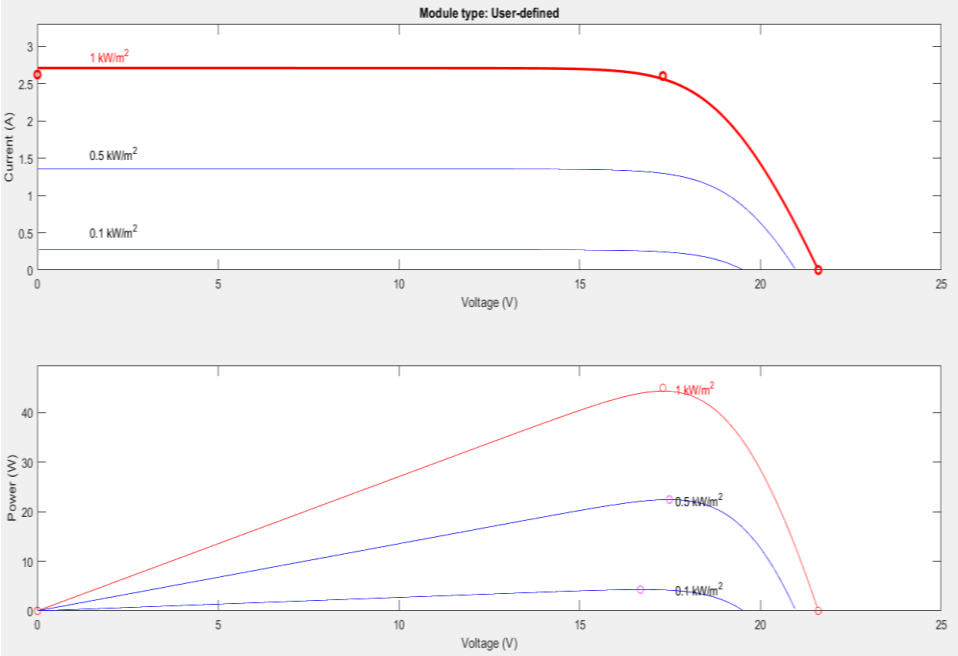

Fig. 5.2 Current and Power

5.3 Speed Controller Simulation and Results:

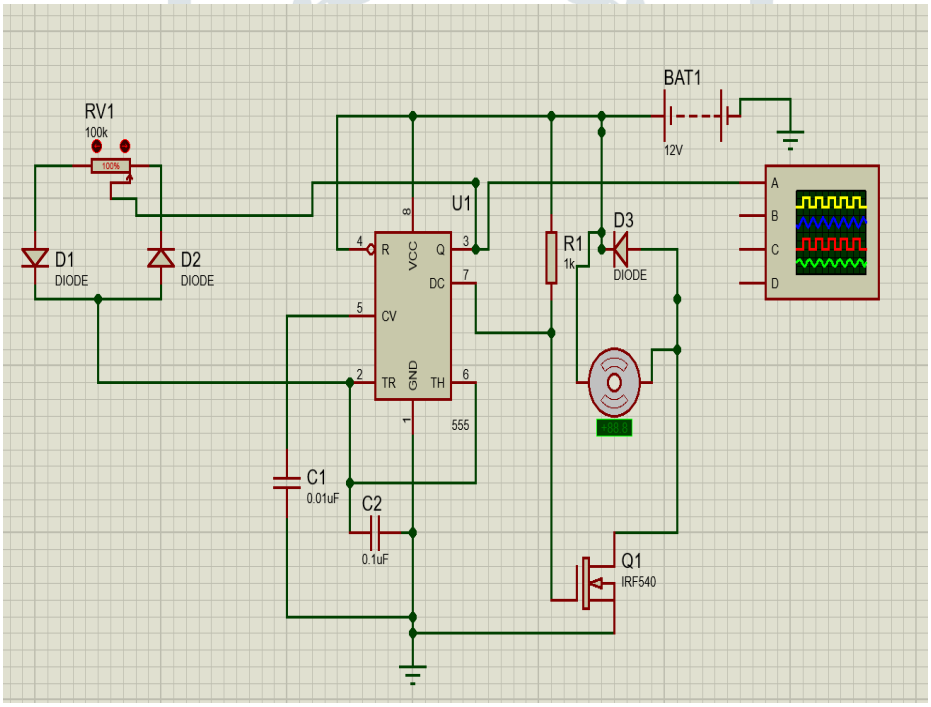

Fig. 5.3 Speed controller simulation diagram

5.3.1 Motor Speed at 25% Potentiometer: (all graphs are Voltage v/s Time).

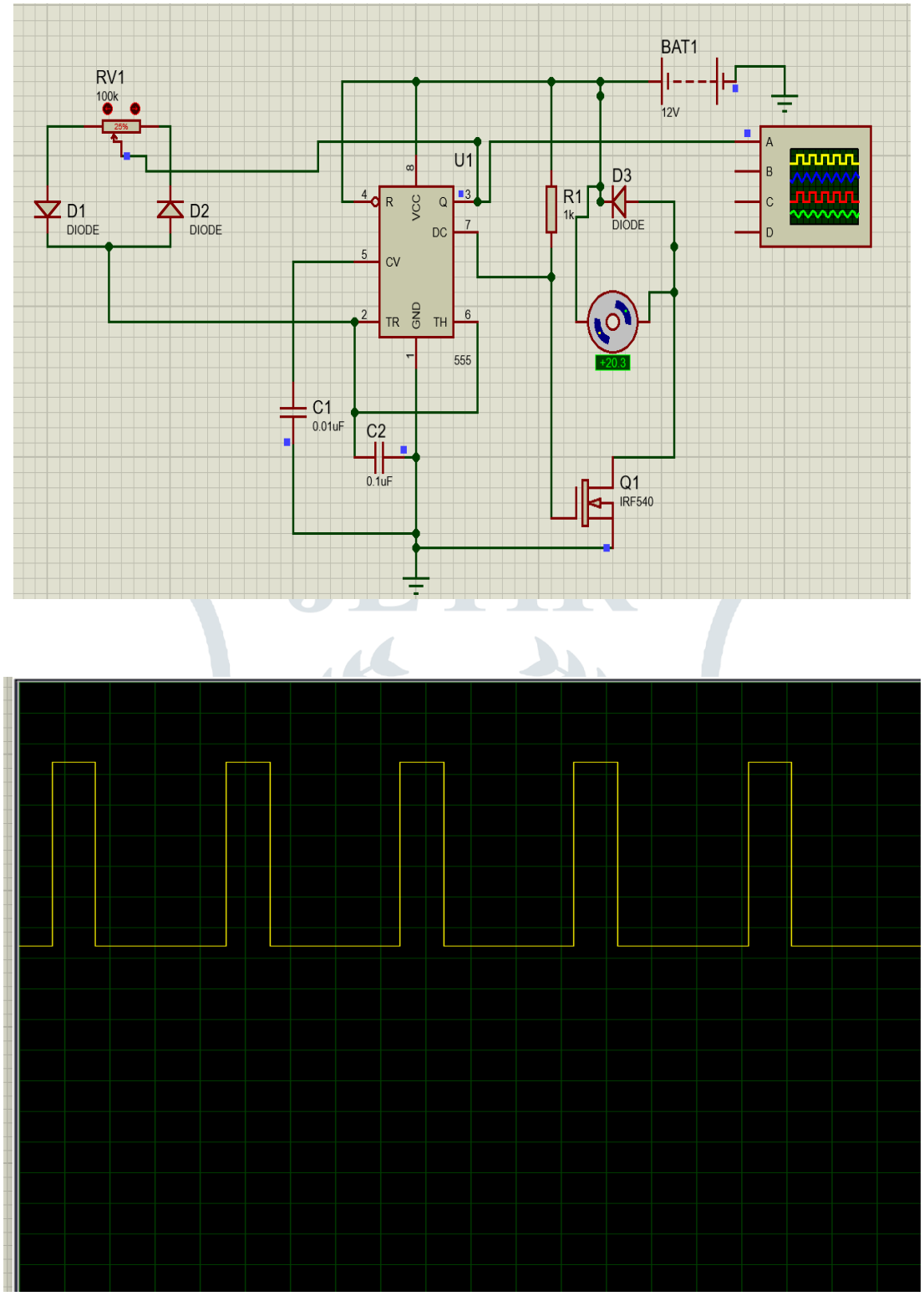

Fig. 5.4 Speed controller simulation diagram and waveforms at 25%

5.3.2 Motor Speed at 50% Potentiometer:

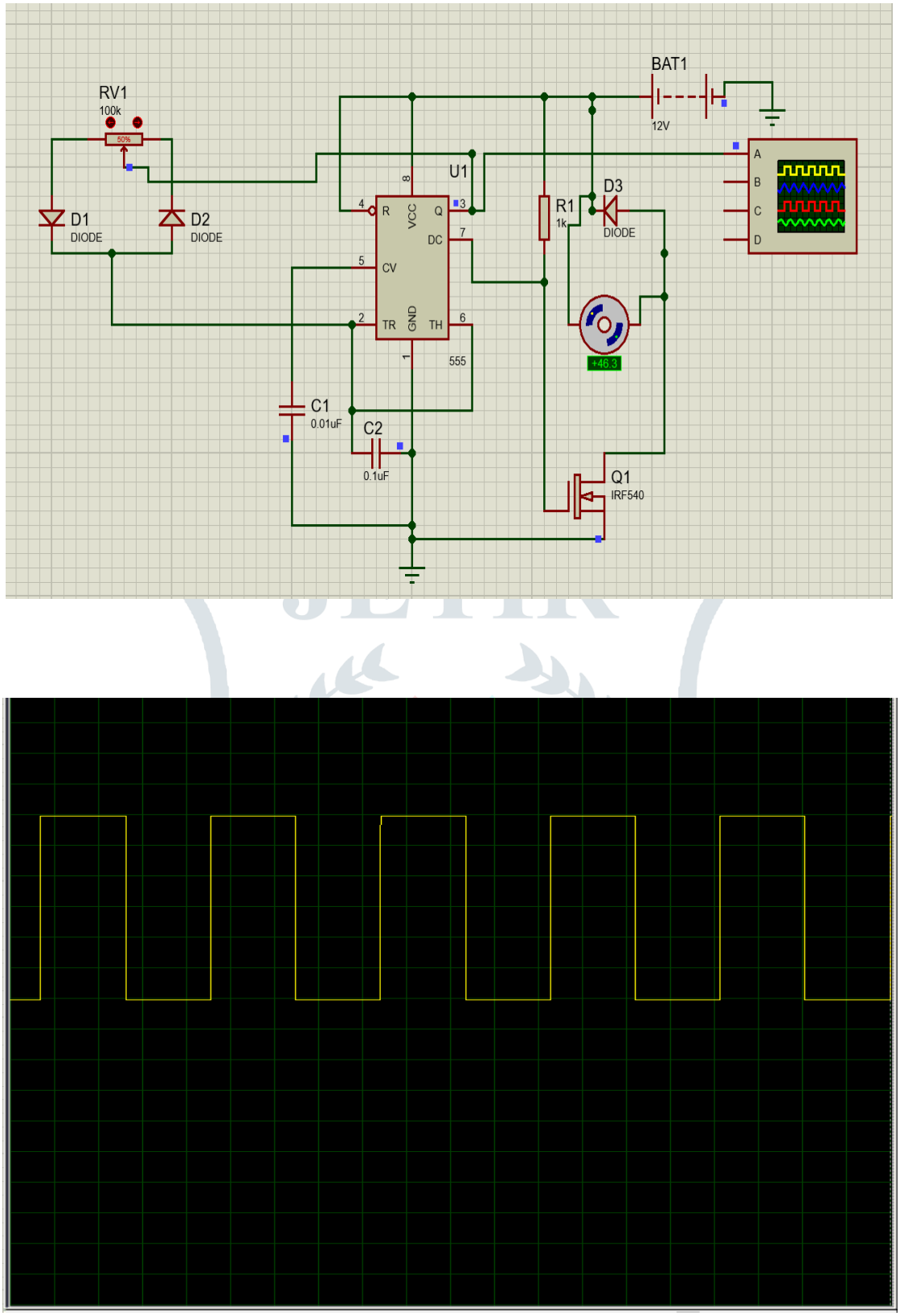

Fig. 5.5 Speed controller simulation diagram and waveforms at 50%

5.3.3 Motor Speed at 75% Potentiometer:

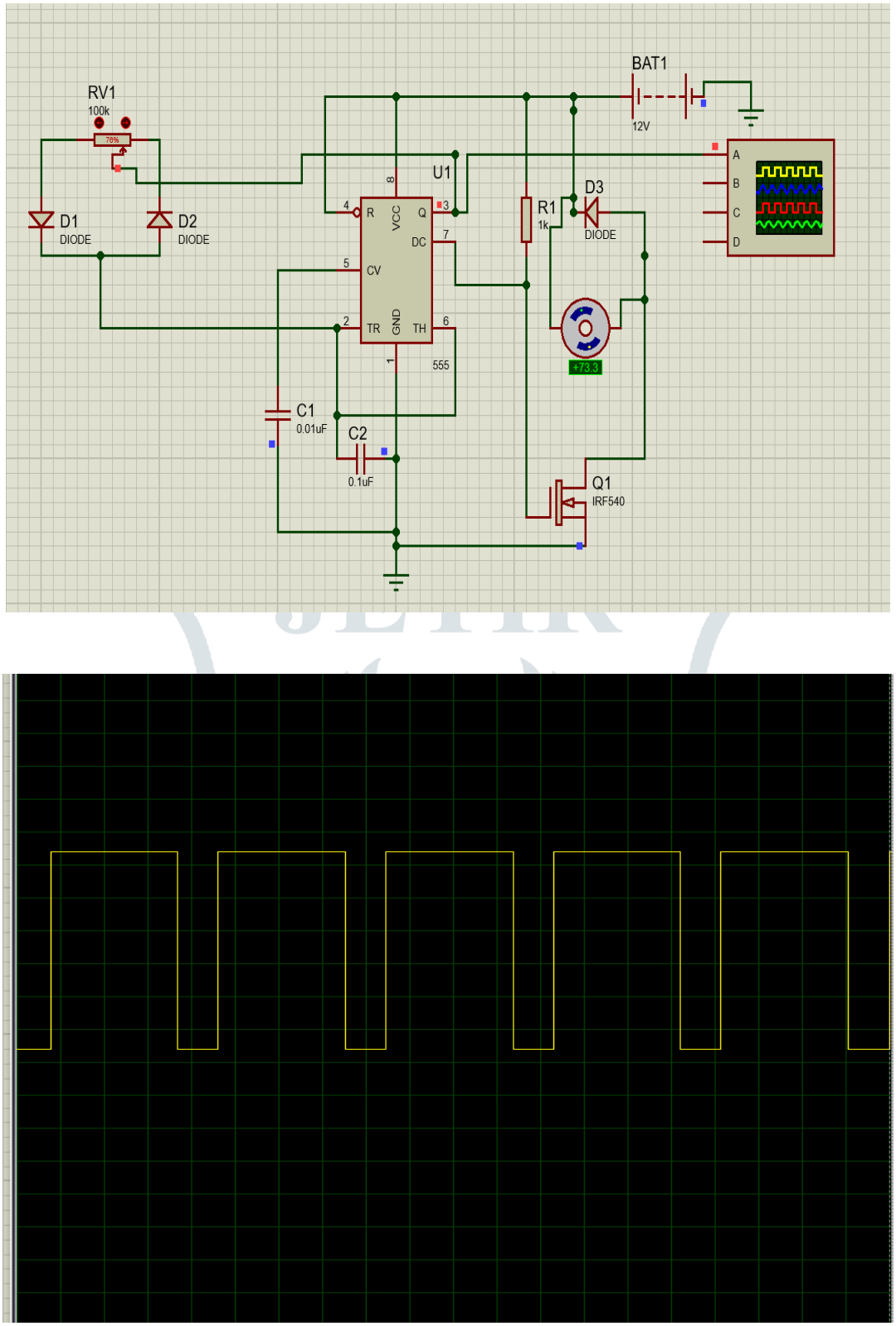

Fig. 5.6 Speed controller simulation diagram and waveforms at 75%

5.3.3 Motor Speed at 100% Potentiometer:

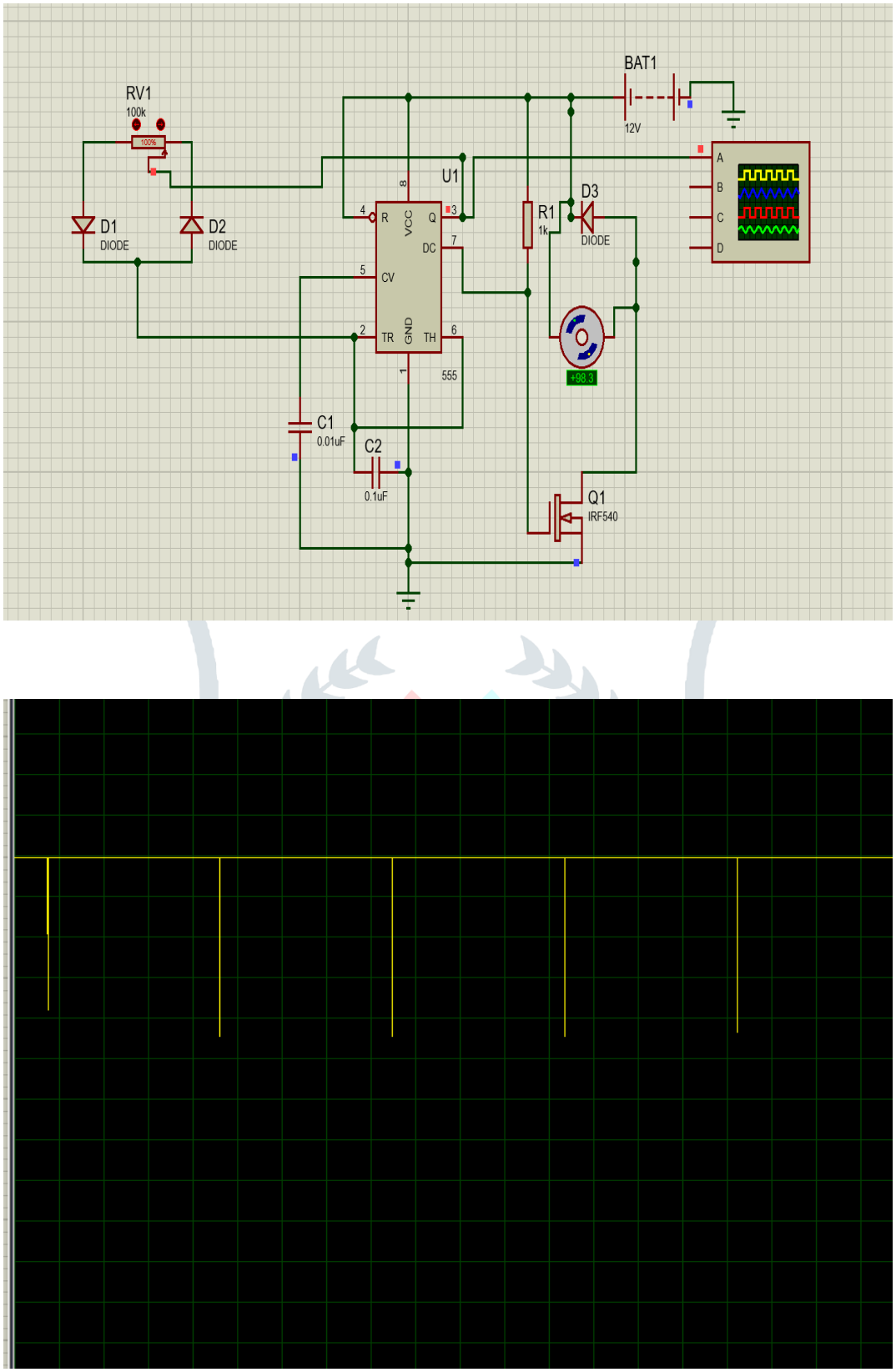

Fig. 5.7 Speed controller simulation diagram and waveforms at 100%

5.4 Comparison Potentiometer position, Motor speed and Voltage

Potentiometer Position	Motor Speed (100 RPM)	Voltage (12 V)
25%	20.3	4.08
50%	46.3	7.40
75%	73.3	9.52
100%	98.3	11.97

Table 5.1 Comparison of Potentiometer position, Motor speed and Voltage.

6. CONCLUSIONS:

The classic technology of fruit and vegetable harvesting is by manual method, by following such a technology the harvesting is not able to complete within a prescribed time the farmer is facing lot of problems such as that labours problem, cost effective, time management problem. Solar based motorized fruit and vegetable harvesting device has helped farmers to overcome all the problems like unavailability of labours, damaging of fruit because of hand touching or picking etc. The design of solar based motorized fruit and vegetable harvesting device consisting of dc motor couple with blades helps to cut the pit of the fruit or vegetable during harvesting. The speed of the motor to be varied by using speed driver, as different fruit or vegetables need different speed based on the strength of the pit. The device also consists of an expandable stick which has a push button which can be used to adjust the length of the stick for the required height because the fruits are at found at different heights Extensive research is helping the innovator to build the robotic model of automatic fruit and vegetable harvesting device, the prototype was designed the various tests were conducted. During these tests the load and its adjustment of rod is noted corresponding deflection is also noted. The bending is directly proportional to length of the stick. During lifting of stick the weight of stick is act on user due to inertia and bending moment. After picking of fruit, the weight of fruit is act with gravitational force, hence the weight is double time it can overcome by user. The base of project sustainability and reliability for better will be adaptability.

6.1 Future scope:

This device can be further improved to operate by robot. We can use template matching mechanism and image sensing process. For automatized process we use obstacle deduction and path planning using robot operating system. Our aim is solving all the fruits without damage. Further we can say picking nature of fruit, in high hills the nutrient fruits are grow in that place, we can use camera correctly pick the fruit. By collecting all the fruits above the basket, there is no time waste for get to picking fruit again from ground.

REFERENCES:

[1]. Bakhtiari, A., Hematian, A., ―Design, fabrication and evaluation of a picking mechanism for fruit harvesting, Indian Journal of Agricultural Sciences 83(10), pp 1027–30, 2013.
[2]. Sarig, Y., Robotics for Fruit Harvesting: A State-ofthe-art Review, J. of Agric. Eng. Research, 1993, No.3, pp. 265-280.
[3] Sanders K. F., Orange harvesting systems review [J]. Biosystems Engineering, 2005, 90(2):115-125.
[4] Li Qinchuan, Hu Ting, Wu Chuanyu,et al. Review of end-effectors in fruit and vegetable harvesting robot [J]. Transactions of the Chinese Society for Agricultural Machinery,2008,39(3)175-179.
[5] Birglen L, Gosselin C M. Geometric design of three-phalanx Underactuated finger [J]. ASME Journal of Mechanical Design, 2006, 128(2):356-364.
[6] Ashby MF, "Materials Selection in Mechanical Design", 3rd edition, Elsevier Butterworth Heinemann, Oxford, UK, 2005.
[7] Bachche, S., Oka, K., ―Design, Modeling and Performance Testing of End-Effector for Sweet Pepper Harvesting Robot Hand, Journal of Robotics and MechatronicsVol.25 No.4, 2013.
[8] Li, P., Lee, S., Hsu, H., ―Review on fruit harvesting method for potential use of automatic fruit harvesting systems‖, Procedia Engineering, Volume 23, Pp 351–366, 2011.
[9] Bachche, S., ―Deliberation on Design Strategies of Automatic Harvesting Systems: A Survey‖, Robotics, Vol 4, pp 194 – 222, 2015.
[10] Nadine Sangster, Terrence Lalla, Satesh Sookhoo , Kristine Baptiste3, ―The Design of a Fruit Picking Device‖, Volume 6, Issue 8, August 2017.
[11] Xin Song, Huiyong Shan, Hua Liu, Junwang Guo, ‗An Underactuated End-effector Design for Fruit Picking ‘, College of Engineering and Technology, Tianjin Agricultural University Tianjin, China.
[12] R. Badadal Raghavendra, Experimental Determination of Cutting Force Required for Severing Fruit Stalks‖ Volume 1 | Issue 8 | January 2015.
[13] Wu Licheng,Yang Guosheng,Sun Zengqi. Review on underactuated finger mechanism [J]. Journal of Central South University (Science and Technology), 2011, 42(z1):417-422.
[14] Zhang Yu. Research on the Fruit-Vegetable Picking Robot End Executor and Mechanical Arm [D]. Shenyang University of Technology, 2014.
[15] Laliberté T, Gosselin C M. Simulation and design of underactuated mechanical hands [J]. Mechanism and machine theory, 1998, 33(1):39- 57.