JETIR.ORG ISSN: 2349-5162 | ESTD Year : 2014 | Monthly Issue
JOURNAL OF EMERGING TECHNOLOGIES AND INNOVATIVE RESEARCH (JETIR)
An International Scholarly Open Access, Peer-reviewed, Refereed Journal

Design and Analysis of Butterfly Valve

[1]Abhishek Mane, [2]Avdhut Kulkarni, [3]Rahul Mane, [4]Mangesh Kulkarni, [5]Alimoddin.N.Shaikh

[1,2,3,4]Student, [5,]Asst.Prof,
[1,2,3,4]JSPM NTC, Pune, Maharashtra, India.
[5]JSPM NTC, Pune, Maharashtra, India.

***Abstract** this study work seeks to develop Valves for hydro power projects are installed for safety, maintenance, and shut-off, as well as for flow and pressure regulation. A Butterfly valve is a type of flow control device, which is widely used to regulate a fluid flowing through a section of pipe. This type of valve is mainly used as safety valve, turbine inlet valve, and pump valve for low to medium design pressures. They are operated by oil hydraulic systems for opening and closing or by closing weight and hydraulic pressure for opening. For turbine inlet valves, oil pressure can also be taken from the governor hydraulic oil system. The sealing system is of flexible, adjustable rubber/metal type to reduce leakage to a minimum. Water flow through the valve is possible in both directions.The main objective of this thesis work is to analyses the option of fabricated variant for door & body in place of casted, reduction in the material of valve body & door by structural design & FEM analysis & optimization in the material of valve component.The 3D modelling to be performs for butterfly valve by using CAD software. Further the stress & displacement FEM analysis of the butterfly valve to be performed by using ANSYS tool to evaluate the optimized result.*

Keywords1:- Butterfly Valve,FEM Analysis,Hydroelectric,Meshing,Body,ANSYS,ASME,IBR.

I.INTRODUCTION

A valve is a mechanical device that controls the flow of fluid and pressure within a system or Process. A valve controls system or process fluid flow and pressure by performing any of the following functions:

- Stopping and starting fluid flow
- Varying (throttling) the amount of fluid flow
- Controlling the direction of fluid flow
- Regulating downstream system or process pressure
- Relieving component or piping over pressure

Now a day's more and more hydro electrical power plants being setup and renovated. But still the design and development of hydro electrical power plant is based on the traditional methods. Therefore there is a huge scope of utilization of modern day's technique like finite element method (FEM) for achieving maximum possible optimization. In any power plant valves for different purposes are usually needed. Normally it is a shut-off valve just in front of the turbine. In this way the turbine may be emptied without emptying the shaft or penny stock. In addition the guide vane cascade is depresserised so that leakage flow is avoided.

II.CONCEPT

Introducing of low cost , corrosion resistance and negligible failure of butterfly valve The concept of the work is,

1) Design methodology is proposed for this type of system that combines multibody simulation and finite elements.
2) FEA analysis using Ansys.
3) Calculation and optimization process.
4) Set of results including stresses strains.
5) Analysis using Ansys by considering feature i.e stress,strain,displacement.

III.OBJECTIVE

- Design of the Butterfly valve in CATIA V5 software.
- Analysis of the valve with different materials using ANSYS 19.2R Software.
- Best material is chosen comparing with present material.
- Best material and design is the final outcome of the project.

IV.SCOPE

When the project study took place we understood that this Butterfly valves are widely used in various industries eg-Chemical plants,Sugar factory,Brewery etc. These all locations has various liquids,steam,Gases etc. Which are passed through butterfly valve with different temperature and pressure causes corrossion and failure of valve.

V.MATERIAL DATA

The most commonly used material for butterfly valve disc is carbon steel, stainless steel, austenitic stainless steel. Stainless steel is the highly used material in the valve.Taking consideration of boilers we have referd to ASME & IBR standards and have selected three materials i.e- ASTM A216 Gr WCB(Carbon steel),ASTM A351 Gr CF8(c,mg,si,Cr,Ni,),ASTM A276 Type 410(Stainless steel-410).

5.1 Parameters Considered:

5.1.1.Material Properties as per ASMT standards shown below:

Sr. No.	1	2	3
MATERIAL NAME	ASTM A216 Gr WCB(Carbon steel)	ASTM A351 Gr CF8(c,mg,si,Cr, Ni,)	ASTM A276 Type 410, (Stainless steel-410
YOUNG'S MODULUS	210 GPa	194 GPa	199.982 GPa
POISSION'S RATIO	0.3	0.265	0.285
YIELD STRENGTH	249.2 MPa	206 MPa	275.76 MPa
ULTIMATE STRENGTH	482.6 MPa	483 MPa	483 MPa

Table 1:MATERIAL PROPERTIES OF DIFFERENT MATERIALS

5.1.2.Allowable Design stress value for various materials as per ASME Boiler and Pressure Vessel code Section VII division I is as below:

Sr. No.	1	2	3	4	5	6
Material	WCB	WC6	WC9	SSTYPE-410	CF8M	CF8C
Ref. *Table*	UCS-23	UCS-23	UCS-23	UHA-23	UHA- 23	UHA - 23
Ref. *Page*	286	294	294	400	420	448

Min. Yield Strength *ksi*	36	40	40	30	30	30
Spec. Min. Yield Strength *ksi*	70	78	73	79	70	70
Allowable Stress Mpa	96.5	96.5	113	96.5	17.5	17.5
Allowable Stress Kg/ cm2	984	984	1153	984	984	984

Table 2.ALLOWABLE DESIGN STRESS VALUE

VI. DESIGN CALCULATIONS

6.1.Calculation for Shell Thickness of Valve Body

6.1.1.Thick Cylinder (As per IBR 290(d)*:*

$$t = \frac{w_p * D}{2f + w_p} + C$$

Where,
WP = Maximum Working Pressure, Kgf/mm2
D = External Diameter of Chest, mm
F= Allowable Stress, Kg/mm2
C = Minimum Positive Tolerance, mm
(5 mm for Carbon Steel and 2.5 mm for Stainless Steel)

6.1.2.Thin Cylinder:

$$t = \frac{P*D}{2*S}$$

Where,
t = Shell thickness mm
P = Maximum Working Pressure, MPa
D = Maximum Internal Diameter of Body, mm
S = Maximum Allowable Working Stress. MPa

6.1.3.FromValve Design Book by Pearson:

$$t = \frac{P*D}{2*f} + c$$

Where,
P = Working Pressure, MPa
D = Inside Diameter or Port Opening, mm
f=MaximumAllowable Working'Stress,
t = Shell Thickness, mm
C = Constant (8 mm for CI and 6.5 mm for Carbon Steel)

6.1.4.By Formula ASME see VIII Div-1:

$$t = \frac{P*R}{(S*E) - (0.6*P)}$$

Where,

p = Design Pressure, Kg/cm2 R = Inside Radius of Shell, cm
S = Maximum Allowable Stress Value Kg/cm2,E = Joint Efficiency = 1

After putting values for all variables in the above formulas, we got a result for shell thickness as given in the following table.

Sr. No.	As per Formulae	Shell Thicknes s (mm)
1	Thick Cylinder (As per IBR 290 (d))	6.03
2	Thin Cylinder	1.05
3	Valve Design Book by Pearson	7.5
4	ASME (VIII Div. 1)	0.90
	Shell Thickness	**8**

Table 3. SHELL THICKNESS ACCORDING TO DIFFERENT FORMULAE

6.1.Calculation of Disc Thickness

By using following formula, we can calculate the thickness of Disc. In this calculation, we consider a disc as a simply supported flat plate with a uniform distributed load.

$$t = \sqrt{\left\{\frac{3*W}{8*\pi*M*f}\left((3*M+1)*\left(1-\frac{4*r^2}{D^2}\right)\right)\right\}}$$

Where,

W = Total Load acting on Disc
M = Reciprocal of Poisson's ratio = 3.4
f = Maximum Allowable Working Stress
r = Distance at which thickness to be determine

Sr. No.	Radius (mm) from center	Thickness (mm)
1	0 (at center)	8.92
2	14.25	8.64
3	28.5	7.89
4	42.75	6.24
	Provided Disc Thickness at Center	9.00

Table 4.DISC THICKNESS AT VARIOUS DISTANCE FROMCENTER OF DISC

VII. MODELING

CATIA V5 is the software that enables to generate the complete digital representation of the product that is being designed. Industrial standard pipe work and complete wiring definition is also done in additional to the general geometry tools there also ability to generate by integrated design disciplines. Collaborative development is also supported in this software.

7.1.MODULES OF CATIA V5:

- Sketcher
- Part Modelling
- Surfacing
- Sheet Metal
- Drafting
- Manufacturing

7.2.BODY

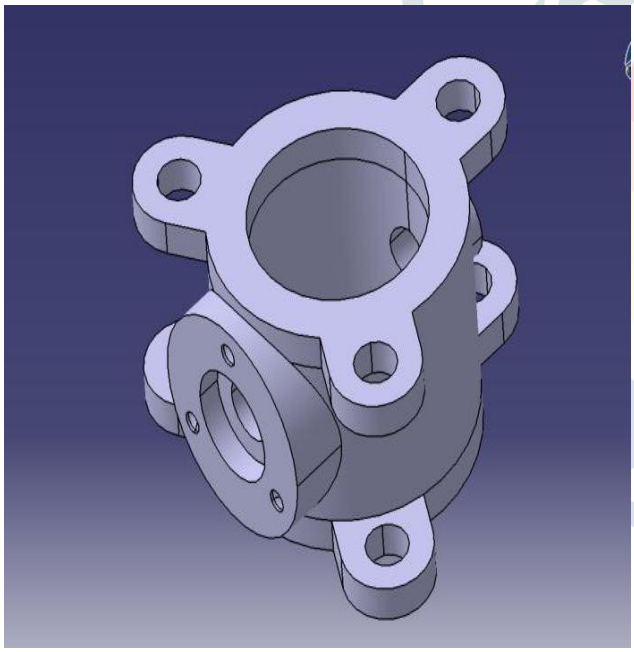

7.4.FLANGE COVER

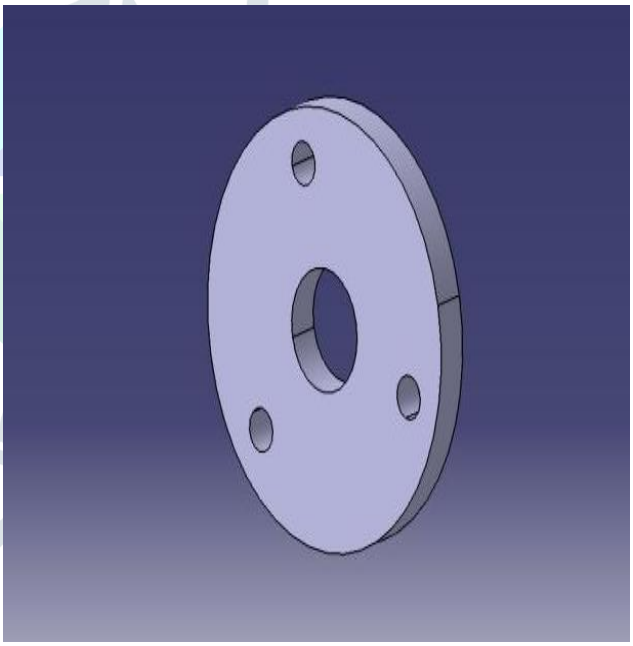

7.3.DISC

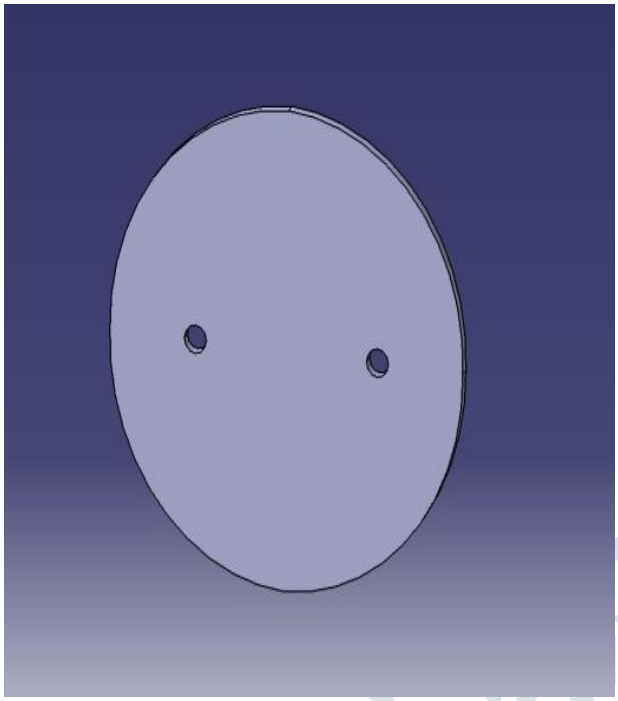

7.5.SHAFT

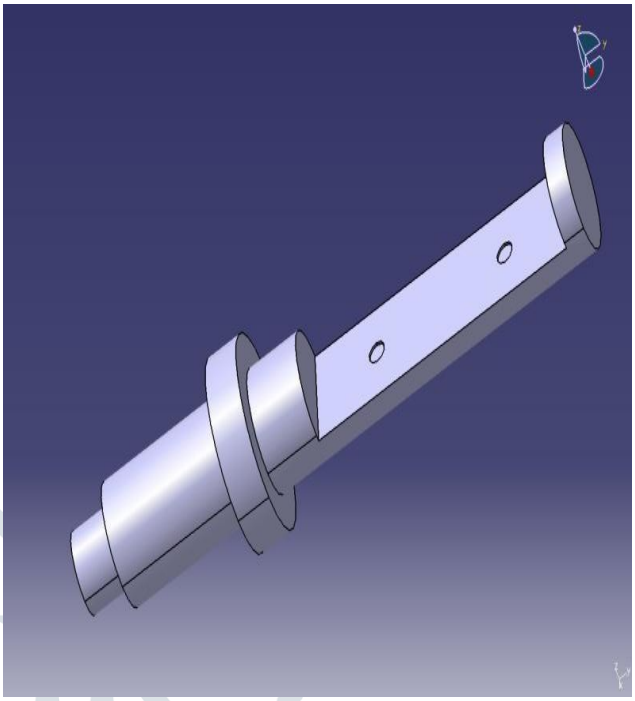

7.6.CONNECTING ROD

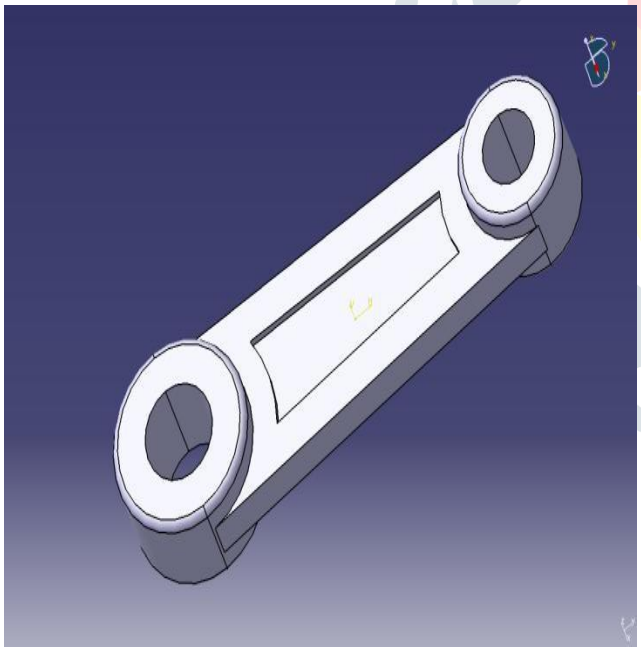

7.7.ASSEMBLY OF VALVE

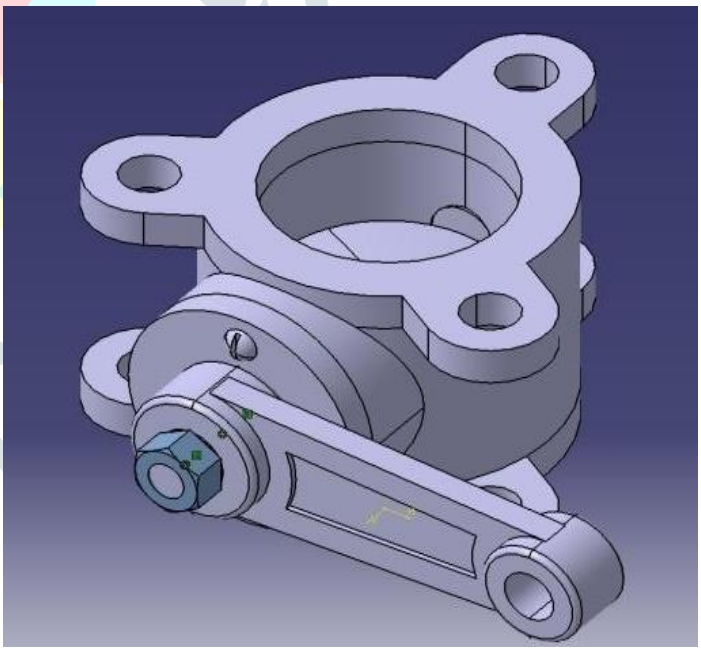

VIII. ANALYSIS ON ANSYS R19.2

The ANSYS program developed and maintained by the Swanson analysis system Inc. ANSYS is self-contained general purpose finite element program. the program contain design model imported from other design software, meshing the model and analysis is performed. Main purpose is to achieve the optimized solution for the engineering problem.

The following steps can be performed by ANSYS finite element analysis software:

- Enable us to design the model or import the designed model from the other software.
- Enable us to apply the operating loads or other design conditions they are operating.
- Enable us to know the stress, strain and displacement. We can also know the temperature distributions along the model.
- Enable us to optimize the design, material to reduce the production costs.
- Enable us to do prototype testing in environments if possible.

8.1..IMPORTED VIEW FROM CATIA

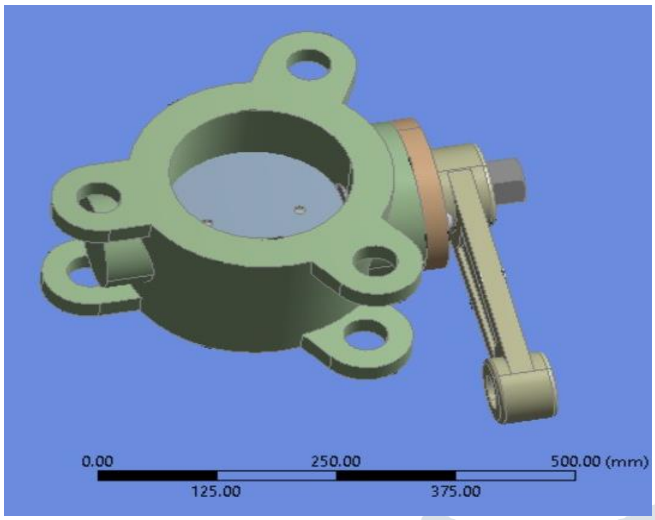

8.2.MESHING MODEL

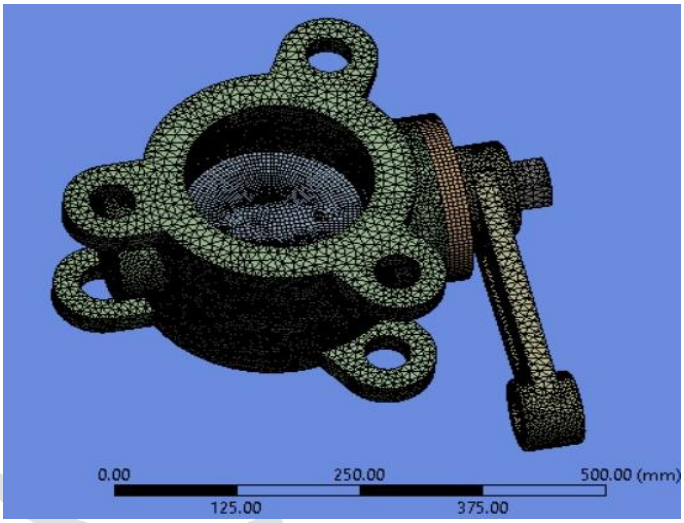

8.3.ANALYSIS ON MATERIAL -

1) ASTM A216 Gr WCB (Carbon Steel)

A) Displacement:

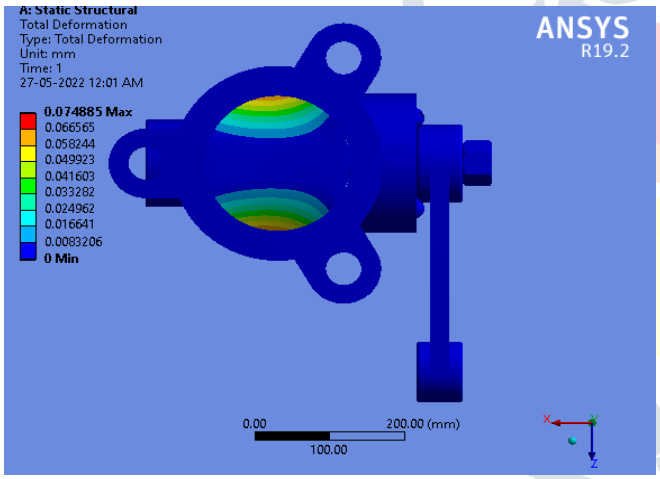

B)Stress:

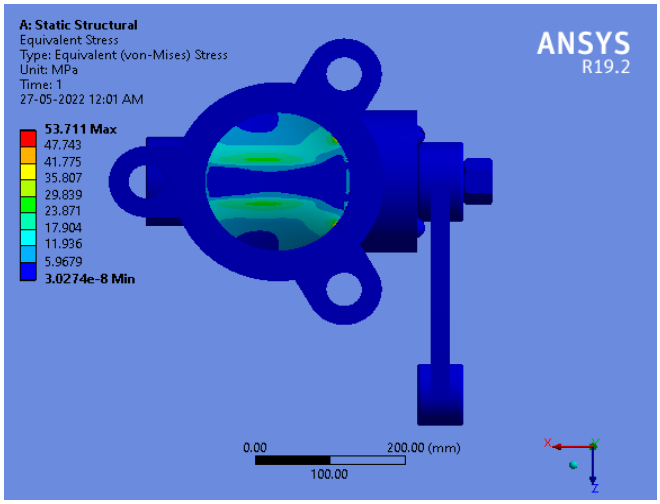

C)Strain:

2)ASTM A351Gr CF8(Eq to SS304)

A) Displacement:

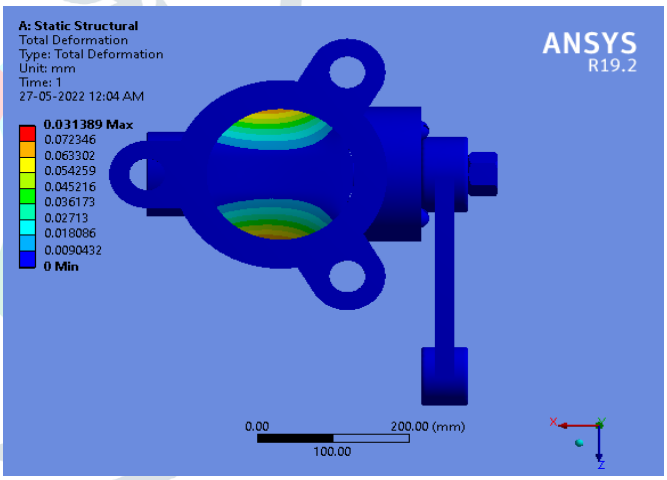

B)Stress:

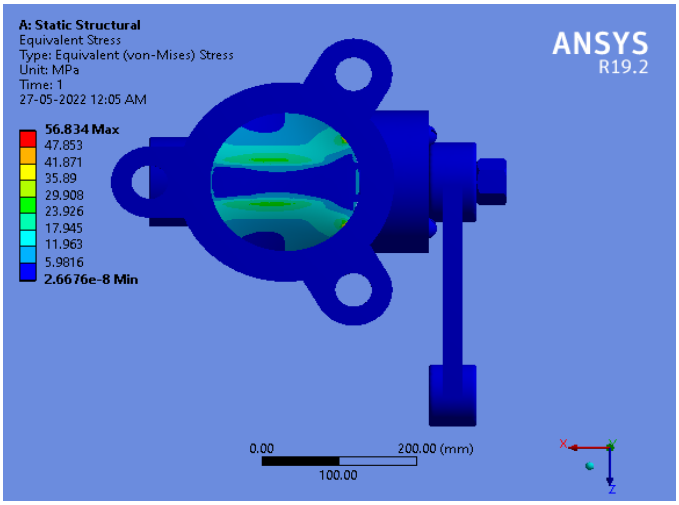

C)Strain:

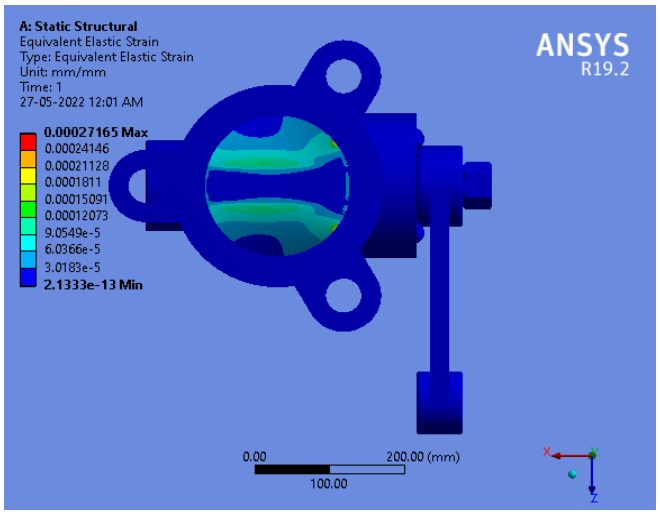

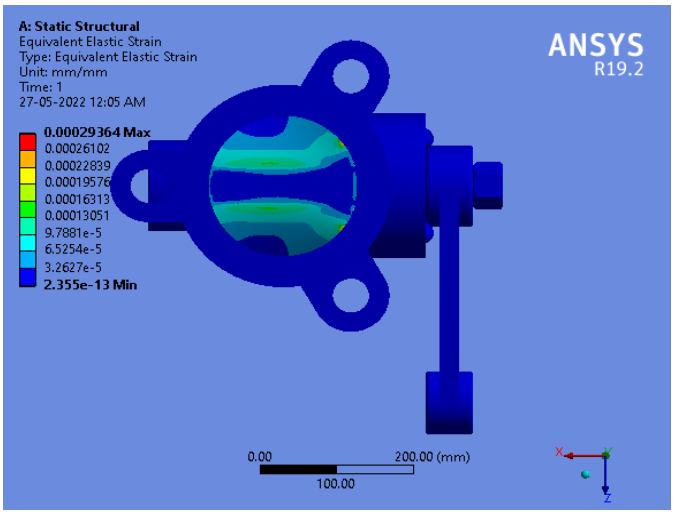

3) ASTM A276 Type 410(SS410)

A)Displacement:

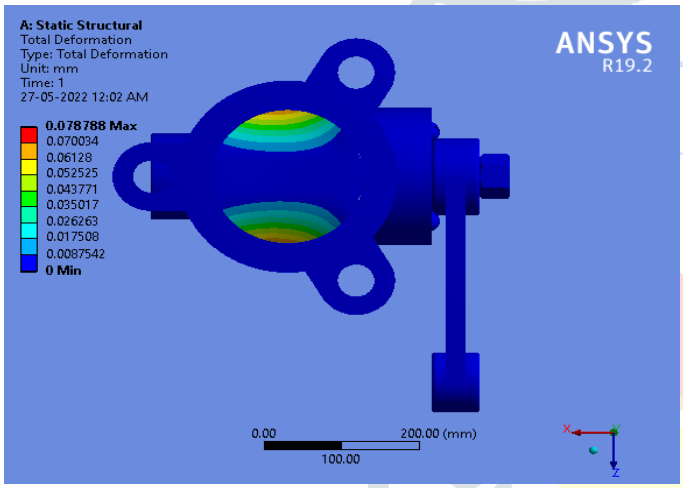

B)Stress:

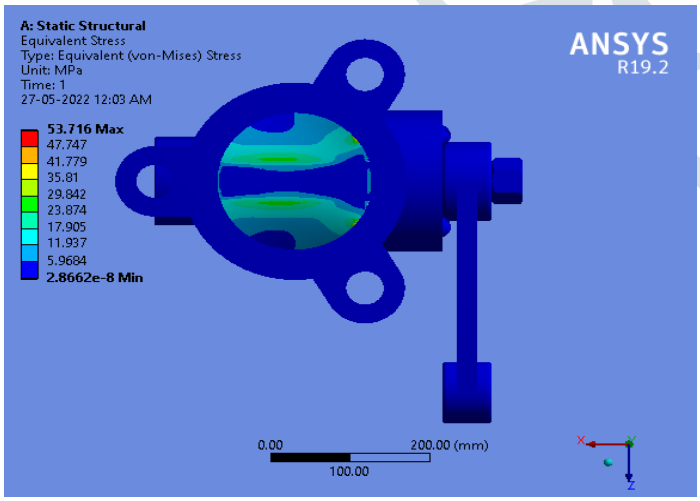

C)Strain:

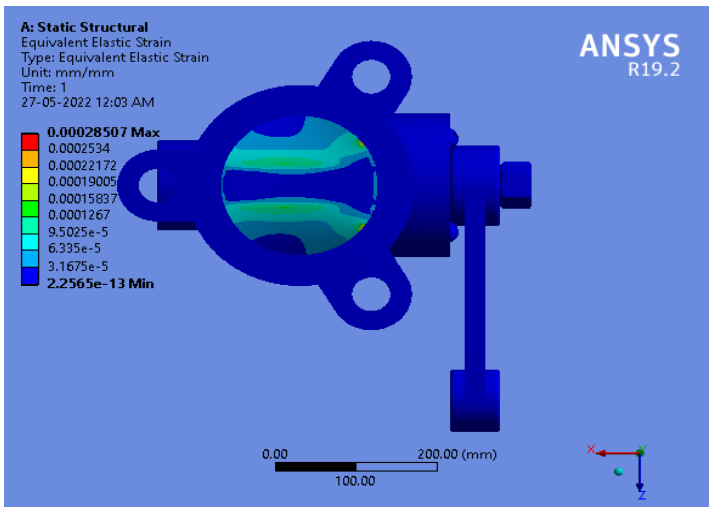

IX. RESULT

Analysis of ASTM A216 Gr WCB (Carbon Steel),ASTM A351Gr CF8(Eq to SS304),ASTM A276 Type 410 (SS410) is done by passing the force and we got different values of displacement,stress& strain shown in table below.

Material	Displacement (mm)		Stress (Mpa)		Strain	
	min	max	min	max	min	max
ASTM A216 Gr WCB (Carbon Steel)	0	0.074885	3.027e-8	53.711	2.133e-13	0.0002716
ASTM A351Gr CF8 (Eq to SS304)	0	0.031389	2.66e-8	56.834	2.355e-13	0.0002936
ASTM A276 Type 410(SS410)	0	0.0787888	2.8662e-8	53.716	2.2565e-13	0.00028507

Table 5.SUMMARY OF ANSYS ANALYSIS

X. CONCLUSION

As shown in results the stress value find out with help of ASTM A216 Gr WCB (Carbon Steel) is 53.711 MPa where as stress value obtained with the is STM A351Gr CF8(Eq to SS304)is 56.84MPa. And stress value obtained with is ASTM A276 Type 410(SS410)is 53.716MPa. And also displacement value obtained with carbon steel and ASTM A276 Type 410(SS410) is more thanASTM A351Gr CF8(Eq to SS304). So from results it is concluded that the best material used for butterfly valve amongst three ASTM A351Gr CF8(Eq to SS304) .

XI. REFERENCES

[1] Cohn, S.D., 1951, \Performance Analysis of Butterfly Valves," J. Instruments and Control Systems, 24, pp. 880{884.

[2] McPherson, M.B., Strausser, H.S., and Williams, J.C., 1957, \Butterfly Valve Flow Characteristics," J. Hydraulics Division, 83(1), pp. 1{28.

[3] Sarpkaya, T., 1961, \Torque and Cavitation Characteristics of Butterfly Valves," J. Applied Mechanics, 28(4), pp. 511{518.

[4] Addy, A.L., Morris, M.J., and Dutton, J.C., 1985, \An Investigation of Compressible Flow Characteristics of Butterfly Valves," J. Fluids Engineering, 107(4), pp. 512{517.

[5] Morris M. J. and Dutton J. C., 1989, "Compressible Flowfield Characteristics of Butterfly Valves", ASME J. Fluids Eng., 111, pp.400-407

[6] Kimura, T., Tanaka, T., Fujimoto, K., and Ogawa, K., 1995, \Hydrodynamic Characteristics of a Butterfly Valve - Prediction of Pressure Loss Characteristics," ISA Trans., 34(4), pp. 319{326.

[7] Huang, C., and Kim, R.H., 1996, \Three-dimensional Analysis of Partially Open Butterfly Valve Flows," J. Fluids Engineering, 118(3), pp. 562{568.

[8] Lin, F., and Schohl, G.A., 2004, \CFD Prediction and Validation of Butterfly Valve Hydrodynamic Forces," Proceedings of the World Water and Enviornmental Resources Congress, pp. 1{8. [9] Hoerner, S., 1958, Fluid-Dynamic Drag: Practical Information on Aerodynamic Drag and Hydrodynamic Resistance, Hoerner Fluid Dynamics.

[9] Kwuimy, C. K., & Nataraj, C. (2012), Modeling and dynamic analysis of a butterfly valve, 70(1), pp. 435-451.

[10] Song, X. G., Wang, L., Baek, S. H., & Park, Y. C. (2009), Multidisciplinary optimization of a butterfly valve. ISA transactions, 48(3), pp. 370-377.

[11] Kim, S. W., Kim, J. H., Choi, Y. D., & Lee, Y. H. (2009), New Trends in Fluid Mechanics Research Springer Berlin Heidelberg, pp. 463-466.

[12] Kimura T, Tanaka T, Fujimoto K and Ogawa K (1995), Hydrodynamic Characteristics of a Butterfly - Prediction of Torque Characteristics ISA Transactions pp. 327-333.

[13] Boesch, B. E., A. S. Humpherys, and D. A. Young. 1981. How scheduling fits in the irrigation program in the Grand Valley of Colorado. Proc. Am. Soc. Agric. Engr. Irrig. Scheduling Conf., (Dec. 1981), pp. 159-165.

[14] Pearson G. H., "Valve Design", Mechanical Engineering Publication Ltd, London.

[15] Ogawa, K. and Kimura,T. Hydrodynamic characteristics of a butterfly valve – prediction of torque characteristic. ISA Trans., 1995, 34, 327–333. Proc. IMechE Vol. 223 Part E: J. Process Mechanical Engineering JPME236 © IMechE 2009 Downloaded from pie.sagepub.com at DONG A UNIV LIBRARY on July 11, 2011 Analysis and optimization of butterfly valve disc 89.

[16] Huang, C. D. and Kim, R. H. Three-dimensional analysis of partially open butterfly valve flows. Trans. ASME, J. Fluids Eng., 1996, 118, 562–568.