JETIR.ORG ISSN: 2349-5162 | ESTD Year : 2014 | Monthly Issue
JOURNAL OF EMERGING TECHNOLOGIES AND INNOVATIVE RESEARCH (JETIR)
An International Scholarly Open Access, Peer-reviewed, Refereed Journal

Simulation of speed control methods in Switched reluctance motor using hysteresis current control, voltage PWM control, and commutation angle control in Matlab

[1] Nandani Raj, [2] Apurva Vashishth
[1]Research Scholar, [2]Assistant Professor
[1,2]Department of Electrical Engineering, Rajasthan College of Engineering for Women

Abstract : Switched Reluctance Motor (SRM) is gaining a lot of interest for mechanical applications, particularly in wind-based energy systems and electric vehicles because it simplifies the development process and also offers high speed of operation with future tolerance to high temperatures. It is also called Switched Reluctance Motor. The Standard of Variable Reluctance Motor is used to operate Switched-Reluctance Motor. This implies the rotor continually adjusts along the lowest reluctance way. As the name proposes, an exchange inverter which operates on a synchronized AC frequency is needed to operate Switched-Reluctance Motor. Currently, Switched-Reluctance Motor (SRM) is taken into consideration as perhaps the most suitable alternative for EVs because of its advantages such as simple structure, relative easiness and high quality, high force age and wide range of speeds. The immediate and anomalous estimation techniques for SRM's advantages are incorporated, examination between deliberate and determined qualities is done.

***Index Terms* – Switched Reluctance , PWM Control , Commutation Angle Control.**

I. INTRODUCTION

Though reluctance motors were invented in the mid-nineteenth century, they have recently gained in popularity because of microelectronics and advanced control systems. Two parts of a reluctance motor — stators and rotors — are essentially the same as those in any regular electrical motor. Some reluctance motors work by adjusting the speed of the rotor with the existing turning attractive field of the stator, making them coordinated in plan. [1]

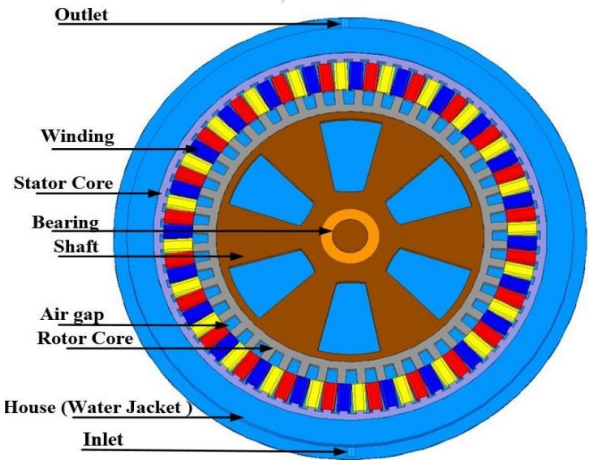

Fig 1. Reluctance Motor

Reversal motors connect with reluctance – which is similar to electrical resistance – in their rotor posts, generating an electromagnetic field that interacts with the stator RMF. There are two subtypes of reluctance motors, and each one uses reluctance in a different way. [1]

A reluctance motor is composed of two distinct parts, the external stationary stator and the internal moving rotor. These sections are inside a vacuum, with just a small hole between them. In general, the construction of these sections changes depending on what type of reluctance motor it is. Additionally, the fundamental principles behind how they work stay true. The stator is made up of many projections on which current flows, twisting around to follow the magnetic field. This makes it easier for electrons to flow, producing energy that can be used for rotational energy. The rotor is made from ferromagnetic metal and follows the shapes of the stator's magnetic field, with bulges or air holes/indents to make sure it follows the current path. [2]

When a rotor post lines up with the stator opening, this is called the base retentive position. This is when the amount of resistance is maximized. When a stator post lines up with the scoring on a rotor, this is called the greatest retentive position because there's no obstruction in the way and thus less resistance. As long as the rotor is not completely unaligned, it will consistently rotate to the least resistant position. This creates a "reluctance" torque, which is what pulls the rotor over towards stator posts and causes it to produce continuous rotational output. [2]

II. Literature Survey

N. Niguchi, K. Hirata, A. Kohara, K. Takahara and H. Suzuki [3] While a flow-based superimposition variable motion-related reluctance motor is proposed for the foothold-based motors of an electric vehicle, the cross-breed type of an electric vehicle is also proposed. This motor follows the idea that abnormal movements, as well as spinning speed are switched without any changes. Furthermore, to tackle the low torque and low speed region problem, a swapping activity between this type of superimposition variable based reluctance motor and a switched reluctance-based motor is proposed in this paper.

S. Kannan [4] This paper shows how current switched reluctance motors can be utilized to generate static attractive portrayal utilizing present day SR motor plan and reenactment apparatus (ANSYS). The three of its kinds of the SR motor-based arrangements are also dissected here (1) Conventional switched based reluctance motor, (2) Rotor and also the stator traded based switched reluctance motor, and (3) Novel Rotor and also the stator traded based switched reluctance motors with round openings in the rotor shaft. The near investigation is determined by the alluring execution and bounded profiles of every model. The examined boundaries are electro-mechanical boundary, rotor torques-based profile, and alluring plots.

M. M. Alaee, E. Afjei, and S. Ataei [5] The switched reluctance based motor (SRM) drives are gaining interest among analysts who believe it will be the hot new thing in movable speed and servo applications. Combining the powerful features of an SRM with a simple yet time-saving converter that is used, we would have something one-of-a-kind: an unbeatable motor drive system for servo and speed applications that don't require high power or rotational speed control. Although there are several converters available for SRM drives, each has its own set of pluses and minuses and there is always some compromise between letting one aspect shine while sacrificing others when another converter is followed.

K. R. Chichate, S. R. Butchery and A. Zadey [6]Due to the numerous electrical-based applications that utilize brushless DC motors, and also DC motors, it is unavoidable to mention SRMs. These motors are applied in various territories, like automation and aviation; they have incredible torque. They need windings on the rotor and they can be utilized with alternating current or with direct current. This type of motor is highly recommended for its easy maintenance. The advantages of this motor make it an option for programmers working with alternating or direct current. The fundamental position of these types of motors is simple as it shows their qualities and structure limitations in evaluation investigations. Afterwards, a process for displaying it was introduced in the paper. From this mechanism for demonstrating technology, a yield after-effect is showed in door beat for 4 level.

Zheng, Zhu, Dong, Deng and Wu [7] The essential work standard and numerical model depending on the examination of the switched reluctance motor-utilizing limited component programming to construct up the reproduction model of double repetitive switched reluctance motor. Through the investigation of the hypothesis of switched reluctance motor, the motor's transition trademark, inductance qualities and torque attributes are looked at and study the impact law of motor structure boundaries on double excess switched reluctance motor; subsequently suitable boundaries of double repetitive switched reluctance motormust be resolved.

A. Siadatan, N. Fatahi and M. Sedaghat [8] This paper is about the ideal plan for multilayer switched reluctance-based motors for use in electric vehicles. The technique proposed claims to raise the effectiveness of the multilayer switched reluctance-based motor by having it operate at a higher speed. The Toyota Prius motor plan depended on the genuine size of a handbrake with a comparable power rating of a switched reluctance-based motor which was 6 to 4 then contrasted and an equivalent surface region and Size, including perfect plan imperatives Switched Reluctance Motor 4 to 4 five-layer, while Switched Reluctance based Motor levers are contemplated.

III. Proposed Approach

Artificial neural networks (ANNs) are used to represent nonlinear appealing qualities of SRMs. ANNs can be seen in SRM visualizing, a two-layer neural network is used to project the ranges and resistance of stage shaping from operating data. The Nonlinear Programming Technique is shown in this example to be a valuable tool. Furthermore, it helps to greatly simplify complex explanations and fit counts.

A four-layer Back-Propagation Artificial Neural Network (BP-ANN) is applied to evaluate the electromagnetic characteristics under a rotor winding flaw condition. Similarly, Fluffy Reasoning Systems have been found to have a significant limitation of nonlinear assessment capability.

IV. Implementation and Simulation

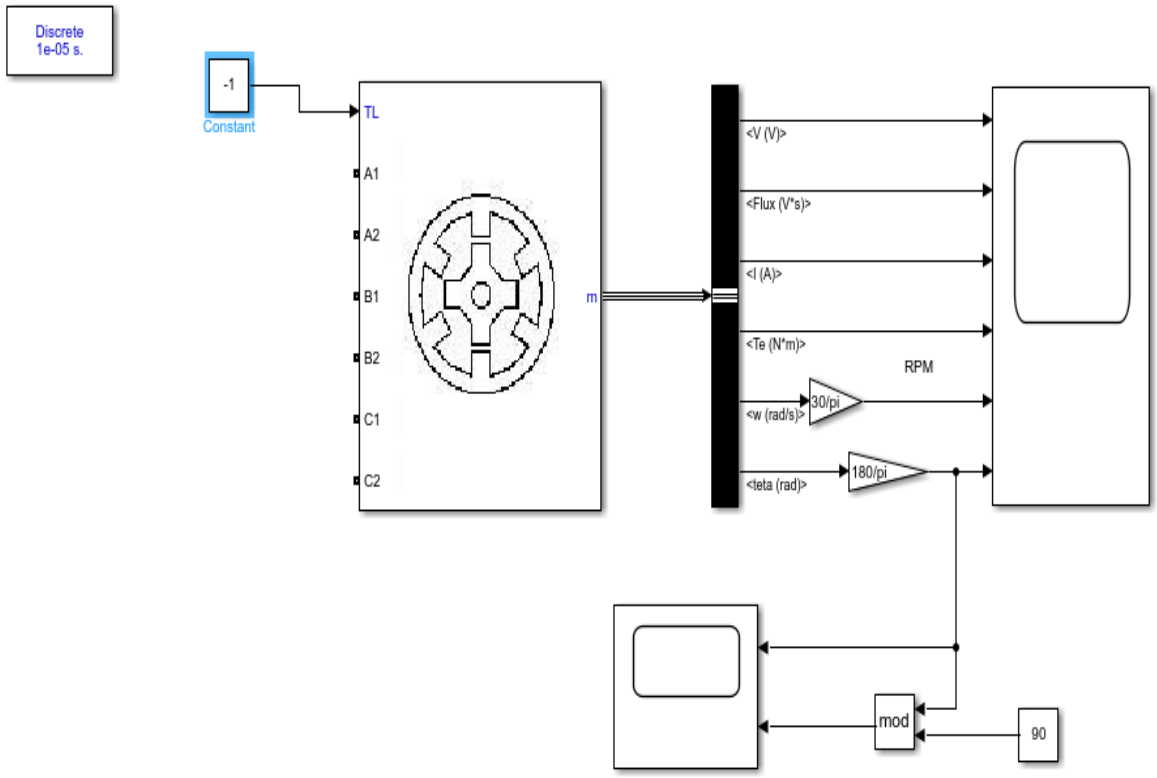

Fig 2 Commutation Pulse Generation

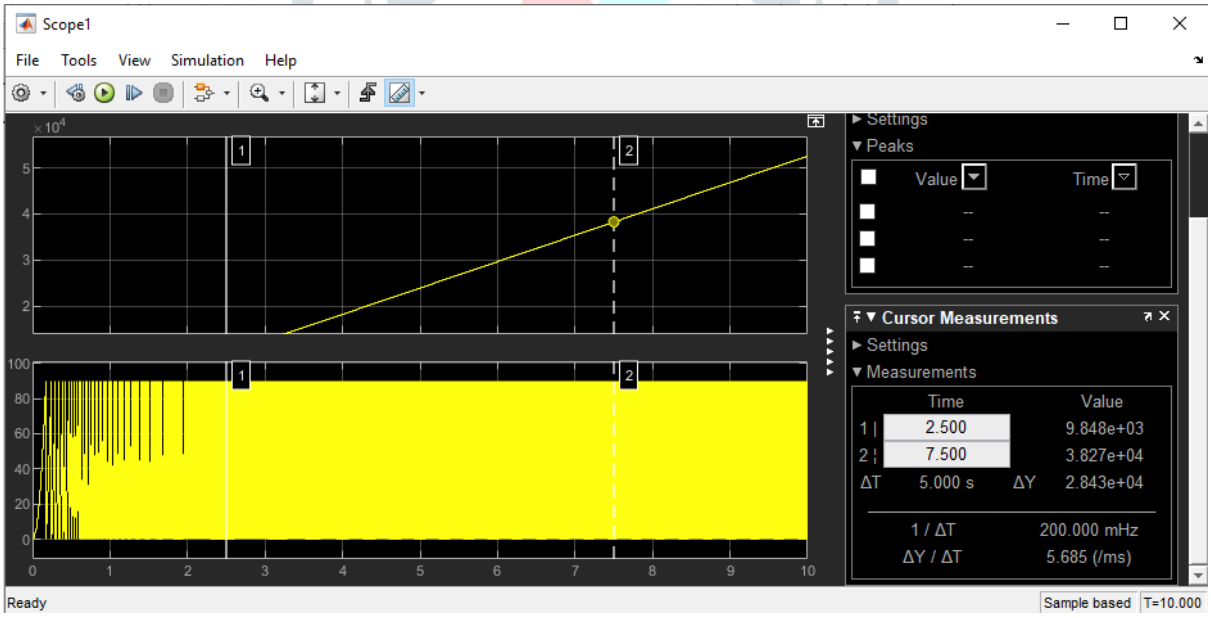

Fig 3 Scope Output Commutation Pulse Generation

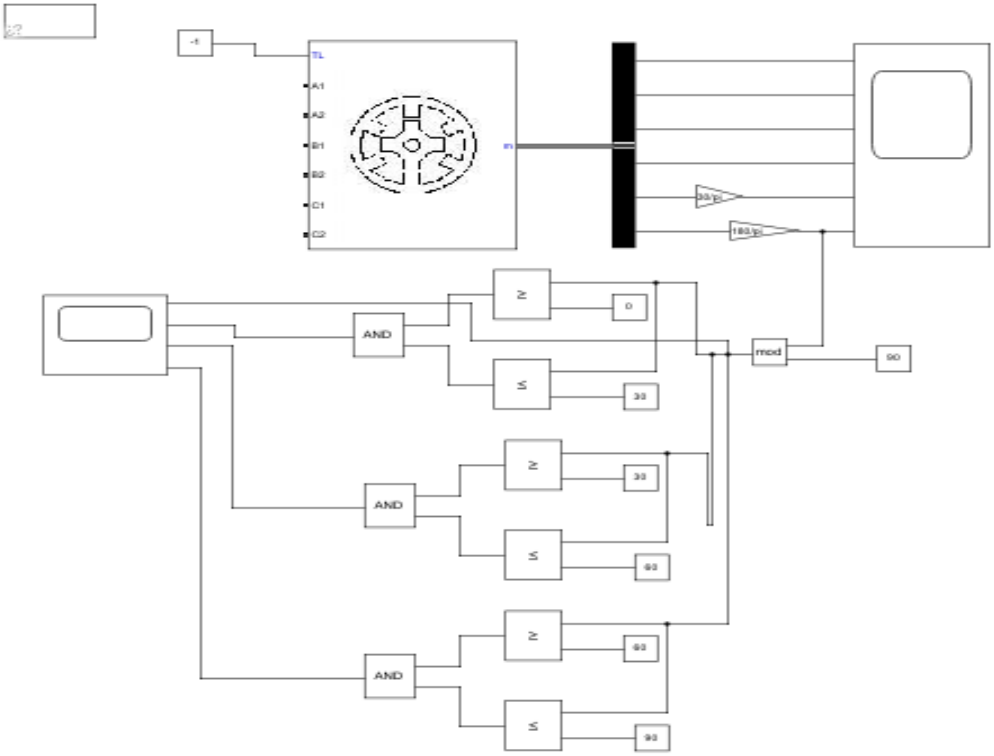

Fig 5 Commutation Pulse Generation with the angle control

In Fig 5, 0 to 30 degree , Phase B , 30 to 60 degree Phase C, and 60 to 90 degree Phase A.

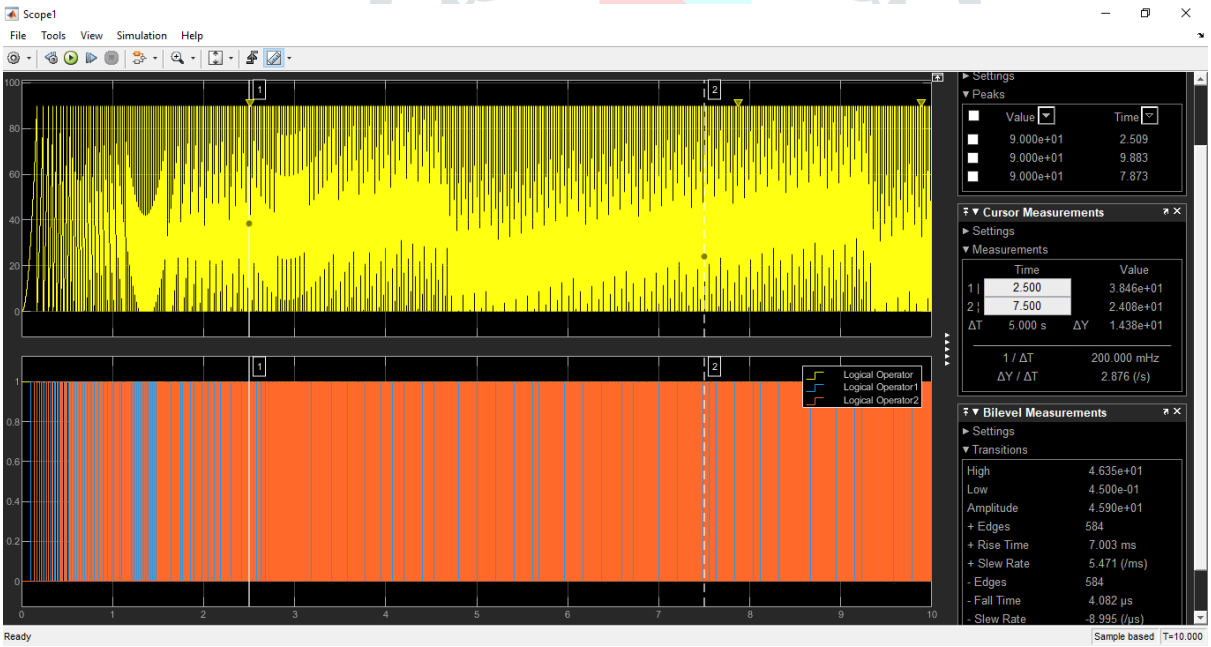

Fig 6 Scope Output Commutation Pulse Generation with Angle Control

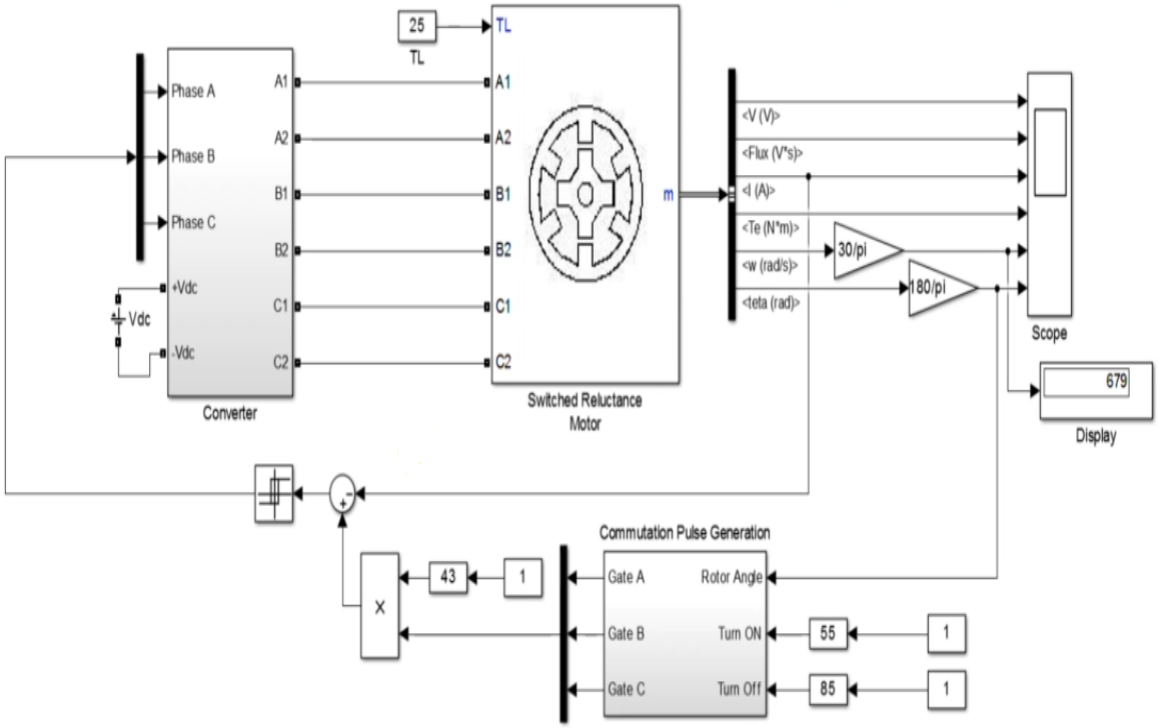

Fig 7 Hysteresis Current Control

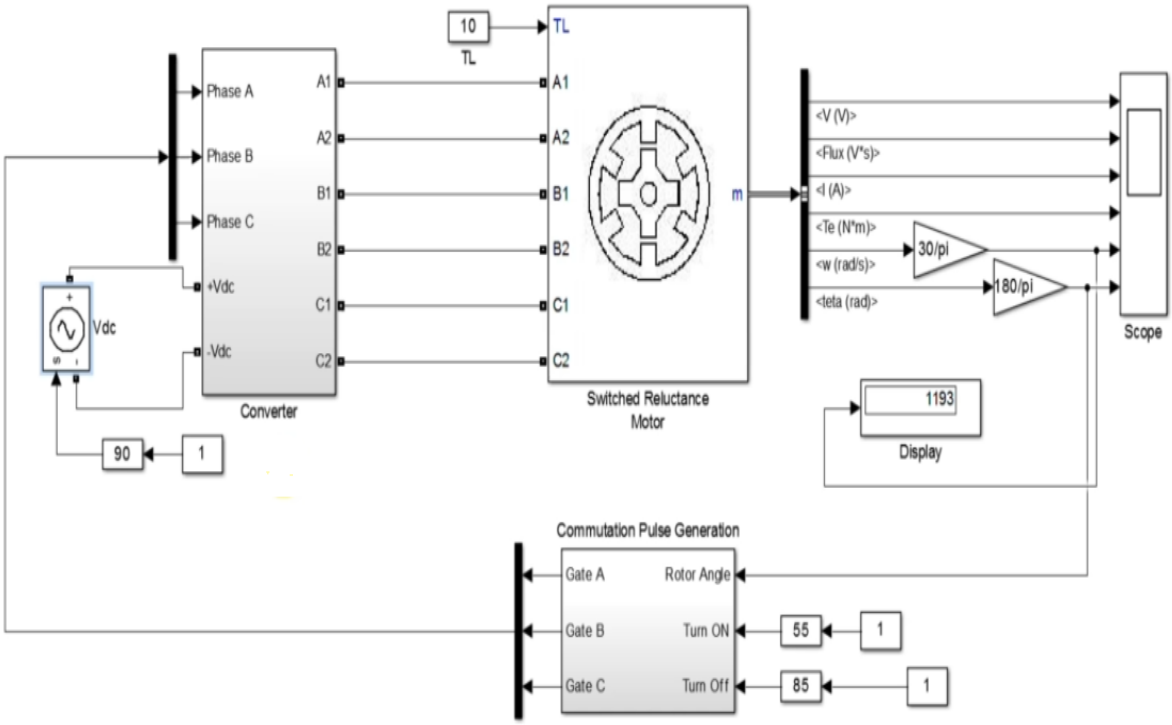

Fig 8 Voltage Control

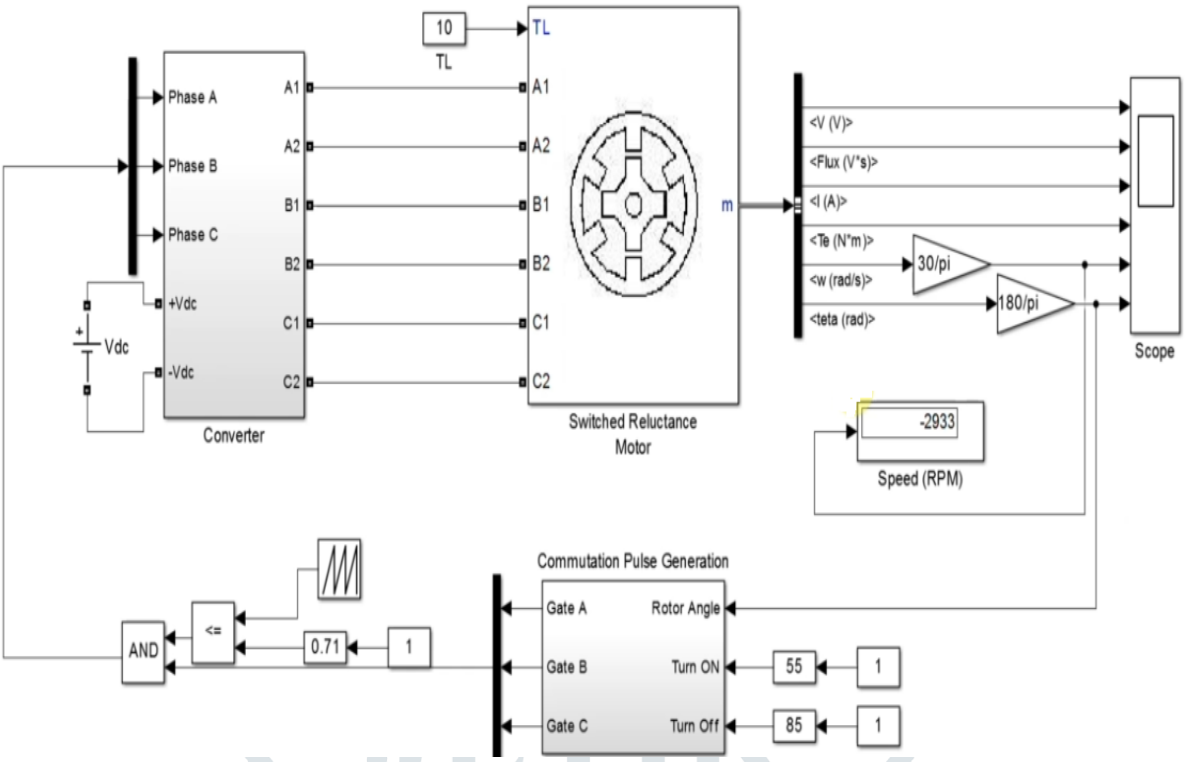

Fig 9 Voltage PWM Control

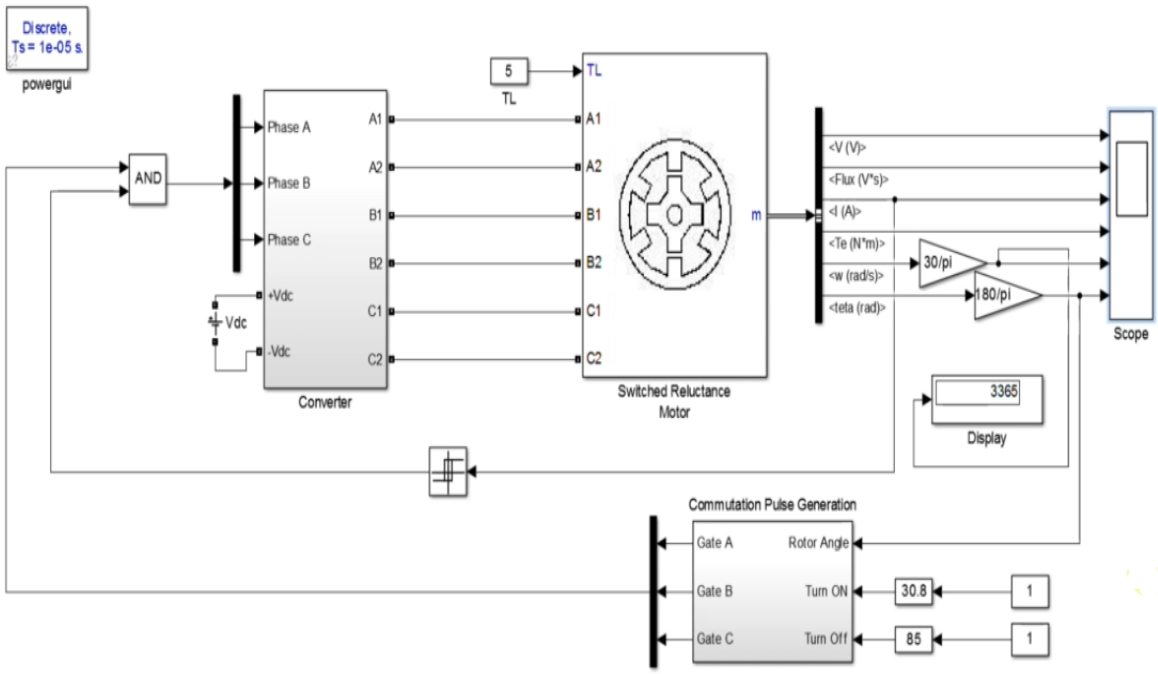

Fig 10 Asymmetric Convertor with Current Limiter

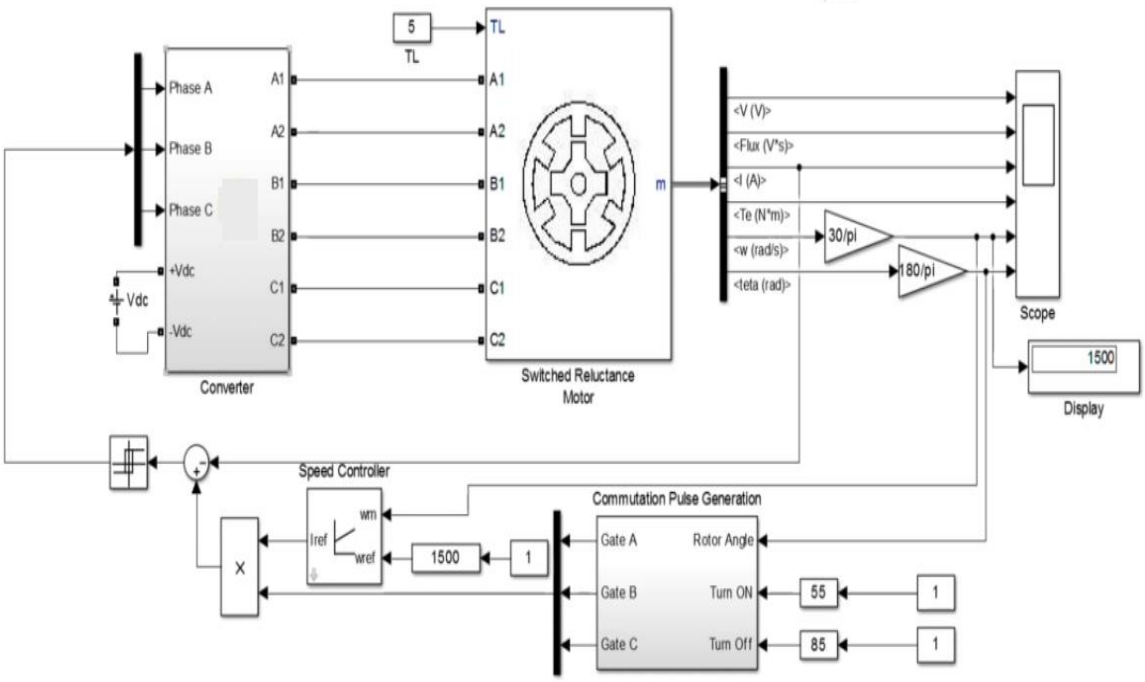

Fig 11 Closed Loop Control Hysteresis Current Control

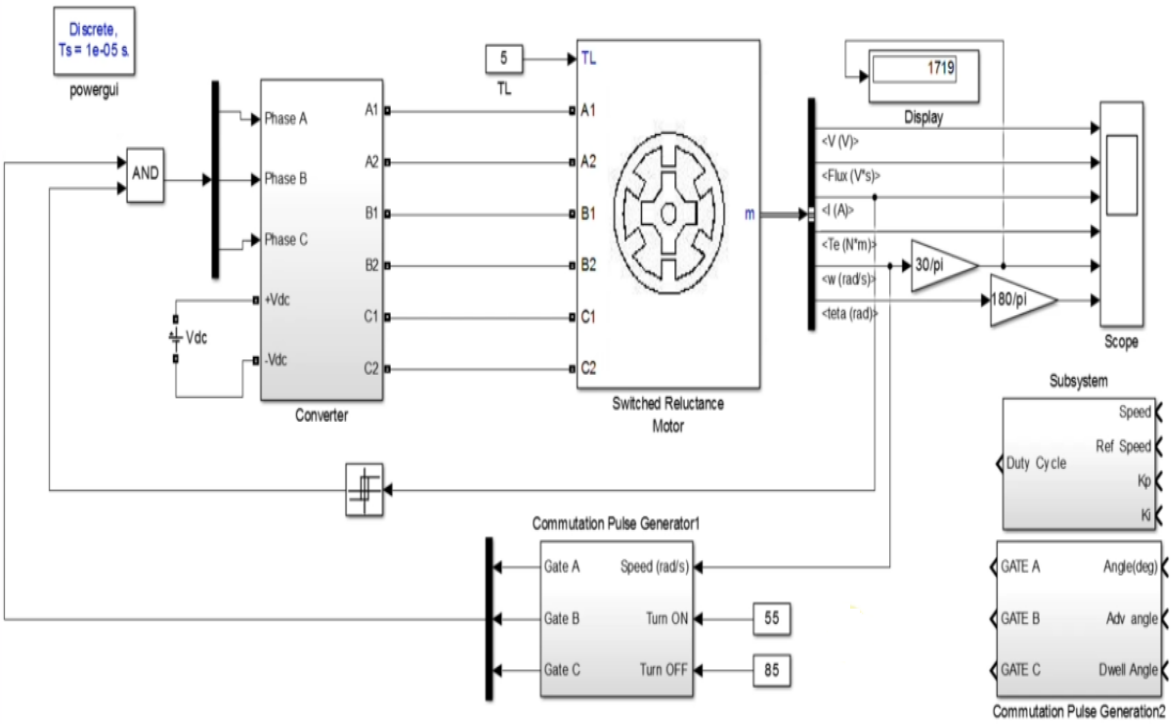

Fig 12 Closed Loop Control with Advance Angle

V. Conclusion

People in many modern industries are noticing the increase in popularity of SRMs, including wind energy-based systems and electric vehicles. It's a very efficient motor that is hard to break. It does not have a problem with high temperatures, and it adapts to internal failure very well. The Switched Reluctance Motor (SRM) otherwise called the Variable Reluctance Motor, follows the principle of variable reluctance. This implies that the rotor always tries to adjust along the most reduced reluctance way. As its name recommends, a changed inverter is needed for the activity of Switched Reluctance Motor. The performance of SRM Motor is better than commonly advertised drawbacks in the marketplace, and can be relied upon to work without fail for a long time with intensive use. The permanent magnet within the motor attracts magnetic field from coils which then runs inside the magnetic field to start current flow, switching polarity of magnetic poles in constant stream.

REFERENCES

1. C. S. Kim *et al*., "Design of Π core and Π2 core PM-aided switched reluctance motors," *2012 IEEE International Electric Vehicle Conference*, Greenville, SC, 2012, pp. 1-6..
2. G. K. Ptakh, D. A. Zvezdunov and R. R. Mustafaev, "Selection of stator yoke height of traction switched reluctance motor," *2016 2nd International Conference on Industrial Engineering, Applications and Manufacturing (ICIEAM)*, Chelyabinsk, 2016, pp. 1-4.
3. N. Niguchi, K. Hirata, A. Kohara, K. Takahara and H. Suzuki, "Hybrid Drive of a Variable Flux Reluctance Motor and Switched Reluctance Motor," *2018 XIII International Conference on Electrical Machines (ICEM)*, Alexandroupoli, 2018, pp. 238-242.
4. S. Kannan, "Novel rotor and stator swapped switched reluctance motor," *2012 IEEE International Conference on Power Electronics, Drives and Energy Systems (PEDES)*, Bengaluru, 2012, pp. 1-4.
5. M. M. Alaee, E. Afjei and S. Ataei, "A New Resonant Driver for Switched Reluctance Motor," *2007 International Conference on Electrical Engineering*, Lahore, 2007, pp. 1-3.
6. K. R. Chichate, S. R. Gore and A. Zadey, "Modelling and Simulation of Switched Reluctance Motor for Speed Control Applications," *2020 2nd International Conference on Innovative Mechanisms for Industry Applications (ICIMIA)*, Bangalore, India, 2020, pp. 637-640.
7. Zheng, X. Zhu, L. Dong, Y. Deng and H. Wu, "Performance optimization of dual channel fault-tolerant switched reluctance motor," *2016 IEEE International Conference on Aircraft Utility Systems (AUS)*, Beijing, 2016, pp. 938-944.
8. A. Siadatan, N. Fatahi and M. Sedaghat, "Optimum Designed Multilayer Switched Reluctance Motors for use in Electric Vehicles to Increase Efficiency," *2018 International Symposium on Power Electronics, Electrical Drives, Automation and Motion (SPEEDAM)*, Amalfi, 2018, pp. 304-308.
9. H. Chen, "Switched Reluctance Motors Drive for the Electrical Traction in Shearer," *2006 CES/IEEE 5th International Power Electronics and Motion Control Conference*, Shanghai, 2006, pp. 1-4..
10. P. Somsiri, K. Tungpimonrut and P. Aree, "Three-phase full-bridge converters applied to switched reluctance motor drives with a modified switching strategy," *2007 International Conference on Electrical Machines and Systems (ICEMS)*, Seoul, 2007, pp. 1563-1568.
11. C. Chiang, M. Hsieh, Y. Li and M. Tsai, "Impact of Electrical Steel Punching Process on the Performance of Switched Reluctance Motors," in *IEEE Transactions on Magnetics*, vol. 51, no. 11, pp. 1-4, Nov. 2015, Art no. 8113304, doi: 10.1109/TMAG.2015.2449661.
12. A. P. Khedkar and P. S. Swami, "Comparative study of asymmetric bridge and split AC supply converter for switched reluctance motor," *2017 International Conference on Computation of Power, Energy Information and Commuincation (ICCPEIC)*, Melmaruvathur, 2017, pp. 522-526.