JETIR.ORG ISSN: 2349-5162 | ESTD Year : 2014 | Monthly Issue
JOURNAL OF EMERGING TECHNOLOGIES AND INNOVATIVE RESEARCH (JETIR)
An International Scholarly Open Access, Peer-reviewed, Refereed Journal

PV BASED EV CHARGING STATION WITH ANFIS CONTROLLER

K. Neelima[1]

M. tech, Dept. of EE, SVUCE, Sri Venkateswara university, Tirupati, India[1]

Dr. Ch. Chengaiah[2]

Professor, Dept. of EE, SVUCE, Sri Venkateswara university, Tirupati, India[2]

Abstract—The electric vehicle charging station outlined in this research is powered by the grid, photovoltaic systems (PVS), and battery energy systems (BES), and it can operate in both shore and off shore environments. Through a DC/DC converter, the power grid, which is fitted with an AC/DC converter, provides steady and uninterrupted power to EV charging stations. The battery acts as a buffer ,which stores the excessive energy during the low peak periods and supplies it whenever the power required. The bidirectional converter unit works in both charging and discharging conditions with the support of the control unit. The performance of the control unit is smoothened by using the adaptive neuro fuzzy inference system (ANFIS). MPPT technique is also employed in this paper to extract the maximum power from the PVS under the different situations.

Keywords: Bi-directional DC/DC converter, DC/DC converters, ANFIS, MPPT, Grid and PV source, electric vehicle charging station.

I.INTRODUCTION

One of the main contributors to environmental pollution is carbon emission from internal combustion engine (ICE) powered automobiles. Electric vehicles can take the place of internal combustion engines (ICE) because they are more advantageous in terms of energy efficiency, economy, and environmental friendliness. Since EVs emit no harmful gases like greenhouse gases and particulate matter that pollute the environment, they help to improve the air quality [1].

Many nations have adopted EVs on a considerable scale to replace ICE vehicles, and the use of EVs as transportation options is on the rise [2]. The Indian government announced a number of initiatives and established goals to emphasise the use of EVs, including the National Electric Mobility Mission in 2012 (target of deploying 5 to 7 million vehicles in the nation by 2020), the FAME (Faster Adoption and Manufacturing of Electric Vehicle) scheme in 2015 (target of reducing the price of EVs), a project to build charging infrastructure and a ban on fossil fuel vehicles beginning in 2030 [3].

Electricity is used by EVs as their primary source of power for driving activities; an EV's battery supplies this electricity. Therefore, as their battery discharges, EVs need to be recharged at specific times. As a result, an EV charging station is required to recharge the vehicle's battery. For around-the-clock functioning, EV charging stations require a continual supply. It is possible to use the electric grid, but it becomes challenging to manage and run if the load at the charging station increases, and there is no advantage if the grid is powered by conventional energy sources [4].Solar energy can be employed in this situation because it is renewable and green, hence there is a demand for renewable energy. Environmental experts recommend that integration of a renewable energy source with an electric vehicle charging station be used widely [5].Solar photovoltaic (SPV) energy is unreliable since it cannot be used continuously throughout the day and is dependent on the weather. To increase the stability and dependability of an EV charging station, a battery energy system (BES) can be connected. ANFIS algorithm, which offers superior dynamic and steady state performance compared to standard PI controller, is implemented in papers [6] and [7].In article [8], a concept has been put up in which EV charging stations are powered by solar PV and a battery storage system; in the event that these sources are not available, the grid and a diesel generator are used to meet the demand. In paper [9], a grid-connected EV charging station has been suggested, where load demand and load variations on the grid have been decreased with the use of a control method.

In this study, the grid supply is used in addition to PVS and BES to support continuous operation of the EV charging stationers is fuelled by solar panels and the grid's power supply, and it is discharged by a load that is modelled after an EV charging station. The main goal is to find the ideal combination of PVS, Grid, and BES to continuously feed the EV charging station, prevent grid stress, and enhance the reliability and quality of power delivery. A bi-direction DC/DC converter built within the BES responds to high power demands by

powering the charging station and absorbing excess power by charging the BES [10], [11].By charging or discharging the BES, the converters help to maintain consistent output voltage and control variations. They are also used for load balancing and energy time-shifting. The performance of the grid current and BES current supplied to the charging station is enhanced by the use of the ANFIS controller, which delivers the proper pulse to the battery side and grid side converters.

The proposed system's block diagram is seen in Figure 1.MATLAB was used to design the suggested system. The block diagram contains two main sources and one auxiliary supply. The battery acts as a supply when load is greater than the supply and it works as storage of energy when the sources have more capacity than the load. All the power sources converted into the required form of supply i.e., DC and using the controller the source is selected.

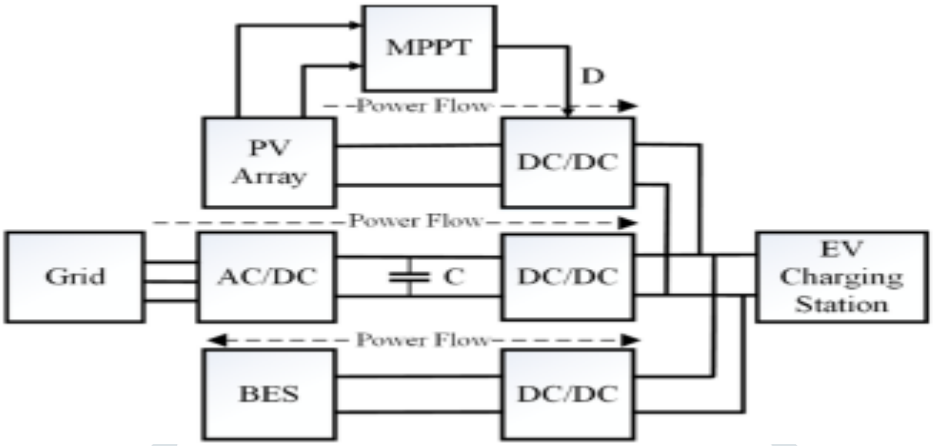

Figure 1. Block diagram of the system.

II. MODEL DESCRIPTION

A. PV Array

Multiple solar cells that operate according to the photovoltaic effect make up a PV array.
Modelled as a single diode, this PV array. An ideal PV array that functions as a regulated current source with output current is created as a MATLAB function. Resistance is linked in series to the output of the regulated current source in order to make this system work. The PV array is assumed to have very little parallel resistance. To obtain the controlled current output, it is necessary to define the open-circuit voltage, short-circuit current, number of solar cells, temperature, and ideality factor to a desired value. Under the conditions of open-circuit voltage and short circuit current [4], it can be concluded that.

$$I_d = I_{sc}\left[1 - e^{\frac{(V_d - V_{oc})q}{N_s nkt}}\right] \quad 1$$

Where Id is output current of PV array, ISC is the short circuit current, V_d is the diode voltage, VOC is the open-circuit voltage, Ns is the number of solar cells in series, T is the temperature of solar cell in kelvin, n is represented by ideality factor of solar cell, k is the Boltzmann constant and the value of k is 1.3806488*10^-23 joule per kelvin, q is the electron charge and the value of q is 1.602176565*10^-19 coulomb.

B. MPPT with DC/DC converter

Under all operational circumstances, the PV array's power draws should be at their maximum. By adjusting the duty ratio of the DC/DC converter, MPPT (maximum power point tracking) techniques are utilised to draw the most power possible from the PV array. In this study, the MPPT is implemented using the perturbation and observation (P&O) approach, and the desired output voltage is obtained using buck-type DC/DC converters. The maximum power point (MPP) of the P&O method is when the derivative of power to voltage, which is negative on the right and positive on the left of the MPP, is zero [7], [8].At MPP, power-voltage characteristics

$$\frac{\partial p}{\partial v} = 0 \quad 2$$

While using a DC/DC buck converter with P&O MPPT, a constant output voltage can be obtained even when the converter is operating in continuous conduction mode. Both the DC/DC buck converter and the P&O MPPT approach require an embedded MATLAB function.

$$v = \frac{V_o}{D} \quad 3$$

WhereV_o,V_{pv} and D are the DC/DC buck converter's output voltage, input voltage, and duty ratio, respectively. The output voltage of the DC/DC buck converter and perturbation step of P&O are both set to the required value. To obtain the proper values of current and voltage for the PV array as well as the duty ratio of the DC/DC converter, we must apply different amounts of short circuit current at different times. By doing this, we obtain the maximum power point of the PV source.

C. Battery energy system with bi-directional DC/DC converter

When load demand rises, the BES provides supply by storing electrical energy from the grid and solar panels. Because of its high-power density, good energy density, long life cycle, low self-discharge, safety features, economic benefits, and low risk of explosion in the event of overload and unintended short-circuiting, lithium-ion batteries are used in BES [12].

BES makes use of a bi-directional DC/DC converter. When the battery is charged by the grid and solar panels, the bi-directional DC/DC converter operates in buck mode. When the battery is discharged by the charging station, it operates in boost mode.

The bi-directional DC/DC converter, which has two ideal switches and the advantages of low cost, simple structure, high reliability, and high efficiency [8], [9], is constructed. The output dc voltage is Vdc, while V_b is the voltage of the battery. Switch S1 operates in buck mode whereas Switch S2 operates in boosting mode.

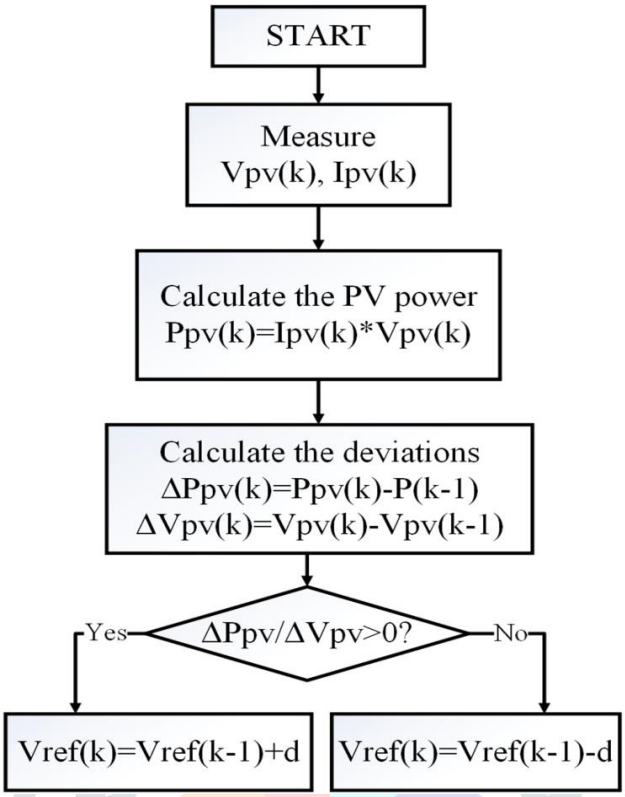

Figure 2 flowchart of P&O

D. ANFIS Control Design

ANFIS controller, which is essentially a neural fuzzy system based on Takagi and Sugano's technique, is employed in the control unit. This approach explains the relationship between input and output quite effectively [15].ANFIS provides a framework for adaptive modelling that can learn knowledge about the current data collection. For creating input-output (I/O) data, it has provided an appropriate collection of fuzzy if-then rules with an acceptable membership function. The linear function of output is called output. The Takagi and Sugano technique states that two fuzzy (if-then) rules are activated in response to a collection of inputs, which can be thought of as

$$f_i = a_i x + b_i y + c_i \quad (4)$$

a_i, b_i, and c_i are the coefficients, and x and y are the inputs, where i=1, 2.

When using a linear transfer function, the output is simply the input. The architecture of ANFIS, as depicted in Fig. 4, is described in five layers.

In layer one, there occurs fuzzification. The objective of fuzzification is to find the membership function (μ) value corresponding to a certain collection of inputs.

The membership function is used to compute the firing strength of the rules in layer 2.

$$w_i = \mu_{A_i}(x) * \mu_{B_i}(y) \quad (5)$$

Each rule's normalized firing strength is determined in layer 3.

$$\overline{w_1} = \frac{w_1}{w_1 + w_2} \quad (6)$$

The output of layer 4 is the result of multiplying the output of the associated firing rule by the firing strength.

$$O_{4,i} = \overline{w_i} \times f_i \quad (7)$$

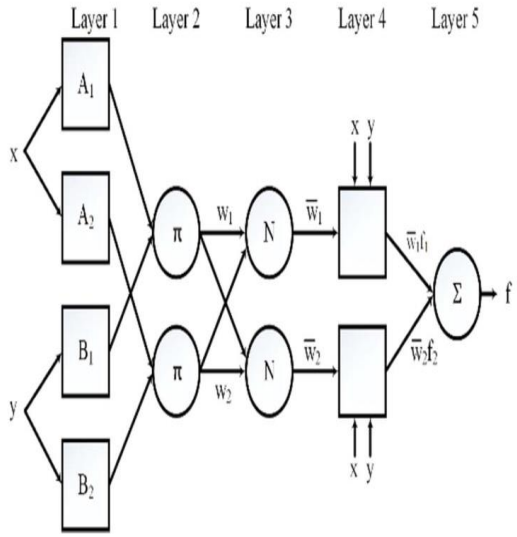

Figure 3 Basic architecture of ANFIS

The output from layer 4 is added up to form layer 5, which results in the final output.

$$O_5 = \overline{w_1} \times f_1 + \overline{w_1} \times f_2 \quad 8$$

The a_i, b_i, and c_i coefficient of transfer functions, as well as the membership function distribution of the inputs, both affect how well the ANFIS performs (x and y).

III. CONTROL UNIT

The control unit in a grid control system is responsible for managing the flow of electricity between different power sources and consumers. It monitors and adjusts the voltage and frequency of the power supply to ensure that it remains within safe limits. The control unit also coordinates the operation of different generators and loads to maintain the stability of the grid. Additionally, it may also facilitate communication between different control systems and operators to ensure that the grid is operated in an efficient and reliable manner. In some cases, it may also include advanced features such as demand response management and integration of renewable energy sources.

The control unit generates the pulses for the grid-side bi-directional DC/DC converter and the BES side DC/DC converter using two different control schemes. The inputs to ANFIS in the first control scheme are BES's error current and change in error current. The bi-directional DC/DC converter is supplied with the proper pulses by the ANFIS controller, which also reduces error. As shown in Figure 4 ANFIS has been trained for 150 Epochs, and the error value is 0.1.

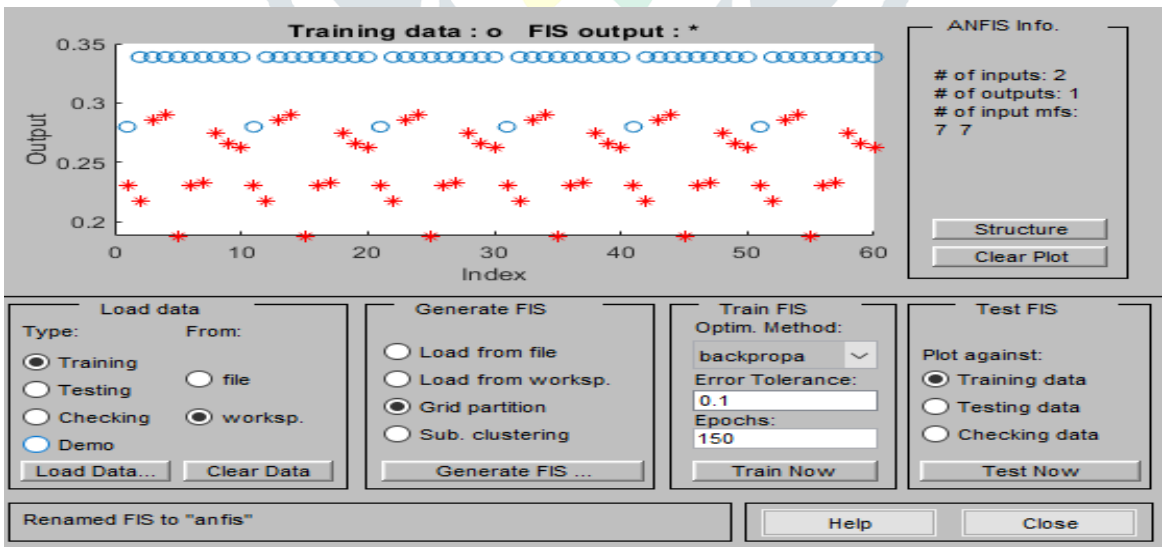

Figure 4 Control interface of ANFIS toolbox for Grid side DC/DC boost converter.

IV. METHODOLOGY

In MATLAB Simulation, an EV charging station that is grid-connected and uses a PV source is modelled and simulated. An AC/DC converter is utilized to convert the 230V, 50Hz grid supply into DC, and a DC/DC boost converter is used to deliver a steady amount of power to the charging station. In the beginning, the PVS and grid feed the EV charging station as well as the BES (battery charging) for one second. The load at the EV charging station grows at 0.1 seconds, and the BES supplies the extra load (battery discharging).With the

aid of P&O MPPT approach, the value of the PV array current, voltage, power, and duty ratio of the DC/DC buck converter interact in such a manner that PVS operates at the maximum power point. The short-circuited current of the PV array is stepped at 0, 0.1s, and 1.25s.

The figure 5 shows the schematic diagram of the circuit. The block diagram is categorised to three parts. 1)Sources 2)Converters 3) Load . There are mainly three sources named grid, PV source and battery. All these sources are converted into the required form of power i.e., A.C or D.C. To extract the maximum power from the PV source, boost converter is used. Grid and PV source are interconnected and battery is also connected to the two sources using the bidirectional converter, using this the load is connected to the sources. The ANFIS controller is used in the Bidirectional converter to improve the performance of the system makes reduces the complexity. The load used in this system are EV type of load, which is the trending topic in the transportation sector. To deal with the EV's, continuity of supply is required at remote areas. To provide the supply to each and every vehicle , requirement of charging stations is increasing.

A boost converter (step-up converter) is a DC-to-DC power converter that steps up voltage (while stepping down current) from its input (supply) to its output (load). It is a class of switched-mode power supply (SMPS) containing at least two semiconductors (a diode and a transistor) and at least one energy storage element: a capacitor, inductor, or the two in combination. To reduce voltage ripple, filters made of capacitors (sometimes in combination with inductors) are normally added to such a converter's output (load-side filter) and input (supply-side filter).

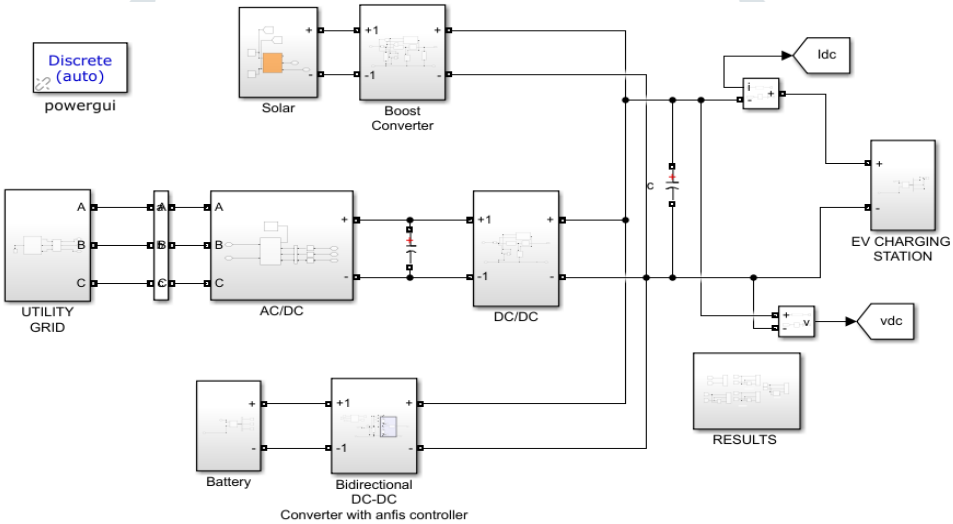

Figure 5. Model diagram of the Simulink diagram of the PV based EV charging station.

The below table 1 shows details of the PV panel used in the Simulink to provide the supply to the load when grid failed to supply the power. The maximum power point voltage and current of a cell are 58.275V and 24.75A the maximum power is 1442.31W. In this experiment one module is connected it consist' s of 60 cells.

Table 1 specifications of PV cell

Parameter	Value
No of parallel cells	20
No of series cells	7
Voltage open circuit	77.2V
Voltage Maximum power point	58.27V
Short circuit current	25A
Maximum power current	24.75A
Cells per module	60

The main source in this experiment is grid with the rated voltage of 407.344V with the frequency of 50Hz. The gird provides the continuous supply to the load, initially the AC is converted to DC using the rectifier. The EV used in this experiment are with the rating of 40Ah and SoC of 50%.

Table 2 specification about the Grid

Voltage (RMS)	407.344V
Frequency	50(Hz)
Resistance, Inductance	0.1Ω, 0.75e-3H
Capacitor input	220e-6F

The load considered is EV type of load, the ratings of the EV load used in the research work are presented in table 3. The base voltage required by the load is 929V and the rating of the EV vehicle is presented in Ah units, the rating of EV used in this work is 40Ah

Table 3 specifications about the Electric vehicle

Base voltage	929V
Rated capacity	40Ah
Initial state of charge	50%
Battery response time	0.1sec

The below Figure 6 and Figure 7 shows the current and voltage characteristics of the PV system under the ANFIS and Fuzzy controlling logics. The ANFIS is more dominant than the fuzzy logic controller. The ripples in the waveform are decreased when the ANFIS controller is applied. To extract the maximum power from the PV source , P&O based MPPT technique is employed.

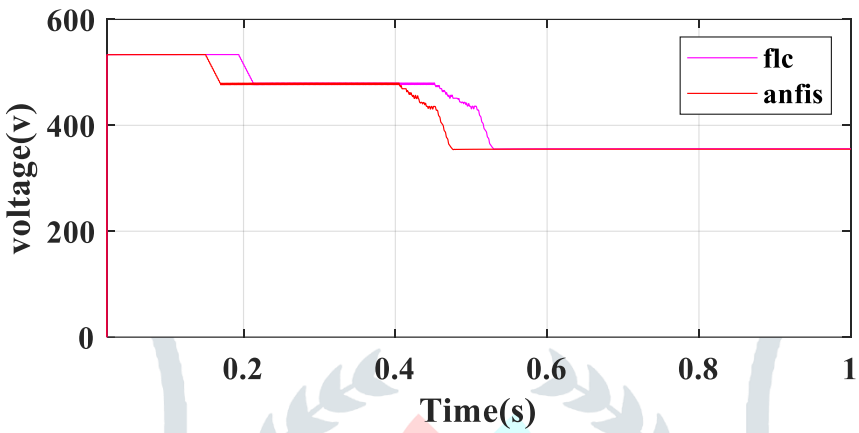

Figure 6 PVS output voltage waveform.

The current parameters of the PV source are the short circuit current is25A and the point at which the maximum power obtained is named as the maximum power point current. The maximum power is obtained at the current of 24.75A. The figure7 shows the current characteristics of PV source when EV is in discharging condition compared with both ANFIS and fuzzy logic controllers

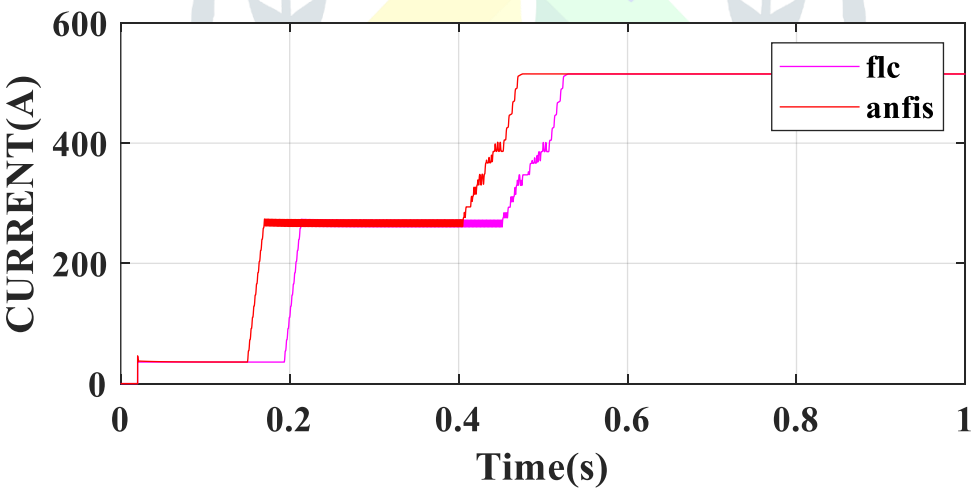

Figure 7. PVS output current waveform.

Figure 8 Represents the current waveforms of the battery under the charging conditions, the simulation is observed for the charging of the EV only. The ANFIS outperforms the Fuzzy logic controller. the current waveforms in the ANFIS controller produces smooth and low ripple content. The rating of battery used in this project is 40Ah and the voltage of 929V. The battery is connected to the bidirectional converter whenever Grid and PV source failed to supply the required load the battery acts as a source. When the supply is more than load then battery acts as a storage device.

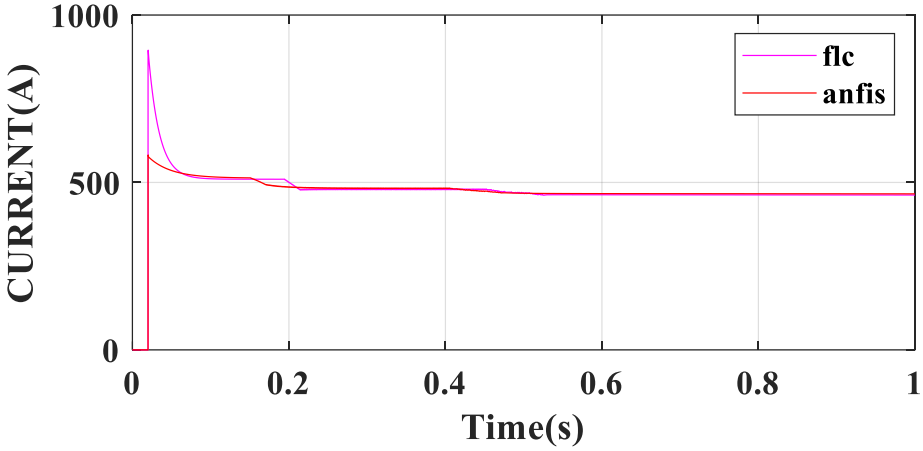

Figure 8. BES current waveform in starting when battery charges

Figure 9 Provides the waveforms of the voltage in the EV when it's charging. The waveforms are ripple free wvaeforms.the waveform shows the charcteristics of EV voltage under the two logicc conditions that are ANFIS nad Fuzzy logic controllers.

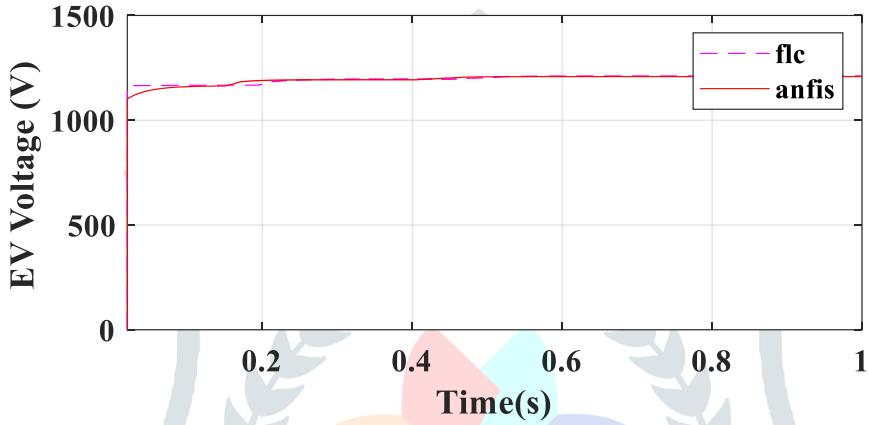

Figure 9. Output voltage at EV charging station.

The constant waveform of the current at an EV charging station in Figure 9 changes every second as the load demand rises. The current in The EV is in negative polarity due to the discharging condition of the battery . Figure 10 Shows the characteristics of EV current under both ANFIS and fuzzy logic controllers.

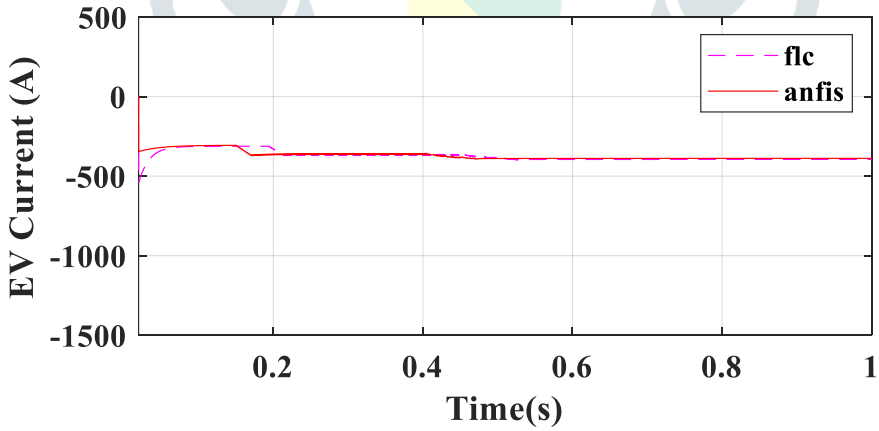

Figure 10. Output current at EV charging station.

The following Figure 11. shows the SOC characteristics of the EV under the discharging condition. The SOC characteristic is useful in advising the condition of the energy of the battery. It provides the longer battery life time and avoids the overcharging and under charging of the EV.

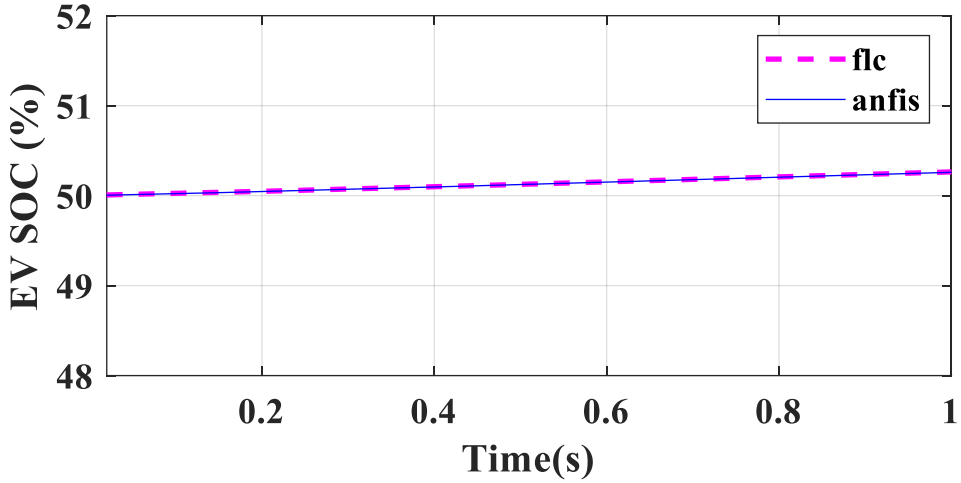

Figure 11. Output power at EV charging station.

V. CONCLUSION

A grid connected PV based electric charging station with the use of BES is proposed. It is concluded that PV source long with BES reduces the burden on the grid and a stable and better-quality power is delivered to the EV charging station. With the help of ANFIS controller in control scheme the performance of the system is improved and EV charging station receives nearly uninterrupted power which is used for electrical vehicle charging throughout the day. The simulation results have been shown to verify the power scenario from different sources to the charging station. ANFIS optimization technique and multilevel inverters are used for improving system performance.

References

[1] M. Ahmadi, N. Mithulananthan and R. Sharma, "A review on topologies for fast charging stations for electric vehicles," *2016 IEEE International Conference on Power System Technology (POWERCON)*, Wollongong, NSW, 2016, pp. 1-6.

[2] A. G. Boulanger, A. C. Chu, S. Maxx and D. L. Waltz, "Vehicle Electrification: Status and Issues," in *Proceedings of the IEEE*, vol. 99, no. 6, pp. 1116-1138, June 2011.

[3] S. Nair, N. Rao, S. Mishra and A. Patil, "India's charging infrastructure— biggest single point impediment in EV adaptation in India," 2017 IEEE Transportation Electrification Conference (ITEC-India), Pune, 2017, pp. 1-6.

[4] T. Biya and M. R. Sindhu, "Design and Power Management of Solar Powered Electric Vehicle Charging Station with Energy Storage System," *2019 3rd International conference on Electronics, Communication and Aerospace Technology (ICECA)*, Coimbatore, India, 2019, pp. 815-820. S.

[5] A. Hassoun, M. Khafallah, A. Mesbahi and D. Breuil, "Electrical design of a photovoltaic-grid system for electric vehicles charging station," *2017 14th International Multi-Conference on Systems, Signals & Devices (SSD)*, Marrakech, 2017, pp. 228-233.

[6] Darvill, A. Tisan and M. Cirstea, "An ANFIS-PI based boost converter control scheme," *2015 IEEE 13th International Conference on Industrial Informatics (INDIN)*, Cambridge, 2015, pp. 632-639.

[7] U. A. Shaikh, M. K. AlGhamdi and H. A. AlZaher, "Novel product ANFIS-PID hybrid controller for buck converters," in *The Journal of Engineering*, vol. 2018, no. 8, pp. 730-734, 8 2018.

[8] B. Singh, A. Verma, A. Chandra and K. Al-Haddad, "Implementation of Solar PV-Battery and Diesel Generator Based Electric Vehicle Charging Station," *2018 IEEE International Conference on Power Electronics, Drives and Energy Systems (PEDES)*, Chennai, India, 2018, pp. 1-6.

[9] R. R. Deshmukh and M. S. Ballal, "An energy management scheme for grid connected EVs charging stations," *2018 International Conference on Power, Instrumentation, Control and Computing (PICC)*, Thrissur, 2018, pp. 1-6.

[10] R. M. Schupbach and J. C. Balda, "Comparing DC-DC converters for power management in hybrid electric vehicles," *IEEE International Electric Machines and Drives Conference, 2003. IEMDC'03.* Madison, WI, USA, 2003, pp. 1369-1374 vol.3.

[11] Y. Du, X. Zhou, S. Bai, S. Lukic and A. Huang, "Review of non- isolated bi-directional DC-DC converters for plug-in hybrid electric vehicle charge station application at municipal parking decks," *2010 Twenty-Fifth Annual IEEE Applied Power Electronics Conference and Exposition (APEC)*, Palm Springs, CA, 2010, pp. 1145-1151.

[12] S. K. Kollimalla and M. K. Mishra, "Variable Perturbation Size Adaptive P&O MPPT Algorithm for Sudden Changes in Irradiance," in *IEEE Transactions on Sustainable Energy*, vol. 5, no. 3, pp. 718- 728, July 2014.

[13] S. Thakran, J. Singh, R. Garg and P. Mahajan, "Implementation of P&O Algorithm for MPPT in SPV System," *2018 International Conference on Power Energy, Environment and Intelligent Control (PEEIC)*, Greater Noida, India, 2018, pp. 242-245.

[14] T. Horiba, "Lithium-Ion Battery Systems," in *Proceedings of the IEEE*, vol. 102, no. 6, pp. 939-950, June 2014.

[15] J. -. R. Jang, "ANFIS: adaptive-network-based fuzzy inference system," in *IEEE Transactions on Systems, Man, and Cybernetics*, vol. 23, no. 3, pp. 665-685, May-June 1993, doi: 10.1109/21.256541.

[16] Kiran Kumar Jaladi, K.S. Sandhu, "Real-Time Simulator based hybrid control of DFIG-WES," *ISA Transactions*, Volume 93, 2019, Pages 325-340.

[17] G. Yadav and K. K. Jaladi, "Comparison of different parameters using Single Diode and Double Diode model of PV module in a PV-Battery system using MATLAB Simulink," *2017 14th IEEE India Council International Conference (INDICON)*, Roorkee, 2017, pp. 1-6.

[18] Kiran Kumar Jaladi, Kanwarjit Singh Sandhu, "Real-time simulator-based hybrid controller of DFIG-WES during grid faults design and analysis," *International Journal of Electrical Power & Energy Systems*, Volume 116, 2020, 105545.