Control strategies and adaptive control methods for DC- DC Buck Converter and multilevel inverter

Vishnu Prasad Manjhi
Department of Electrical Engineering
Truba Institute of Engineering and Information Technology

Prof. Nivedita Tiwari
Department of Electrical Engineering
Truba Institute of Engineering and Information Technology

Abstract-The switched-mode dc-dc converters are some of the most widely used power electronics circuits for its high conversion efficiency and flexible output voltage. Many control methods are developed for the control of dc-dc converters**.** It is observed that nature of DC- DC converter is nonlinear and time variant systems, and does not lend them to the application of linear control theory. The performance of buck converter has been studied and is undertaken for their theoretical verification, graphical representation and Matlab simulation. From the linear controller PI, PID is considered and nonlinear controller sliding mode control is taken as control method. The paper work will highlights nonlinear aspects of buck converter, nonlinear controller like sliding mode controller and hybrid type of controller SMC PID. This will also focuses the benefits of nonlinear control.

KEYWORDS: *SMC (sliding mode control), PI and PID Control, DC-DC BUCK converter.*

1. INTRODUCTION

DC–DC converter convert DC voltage signal from high level to low level signal or it can be vise versa depending on the type of converter used in system. DC-DC converters are widely used in a variety of applications, ranging from computer to medical electronic systems, adapters of consumer electronic devices, spacecraft power systems and telecommunication equipments. The wide range of applications has made this an active research field. A DC-DC converter is a switching circuit, which transforms the voltage of a DC source into other desired voltage in the load side. Buck converter is one of the most important components of circuit it converts voltage signal from high DC signal to low voltage. In buck converter, a high speed switching devices are placed and the better efficiency of power conversion with the steady state can be achieved. This is achieved through a suitable switching process of the circuits. Thus, the objective of the switching control in DC-DC converters is to realize high power transfer efficiency and good tracking of output voltage. Due to its switching characteristics, the control problem associated with the converter still poses a challenge for researchers. In this paper work performance of buck converter is analyzed. The circuit may consist of nonlinearity like delay, hysteresis etc. and because of this output voltage is not constant. To settle the output voltage within minimum settling time and less overshoot different types of controllers are considered such as linear controller PI, PID and in nonlinear controllers SMC (sliding mode controller).The paper deals with comparison of performance of DC-DC buck converter using controllers PI, PID, SMC and SMC PID[1],[2]. To deal with the switching characteristic of converters, many nonlinear control methods have been studied, such as fuzzy control, neural network and slide mode control.

As an example, the design of a PID controller is based on the Bode plots or tuned with Ziegler-Nichols techniques. Due to the highly nonlinear characteristics of the DC-DC converters, the PID control does not allow disturbances rejection and fast transient response time. As a result, there is more interest in developing more nonlinear and advanced non-conventional robust control structures to improve the performance of the DC-DC converters.

Sliding mode controllers are well known for their robustness and stability but this kind of controller operate at infinite switching frequency so-called chattering phenomenon [4]. But the high speed switching in power converter introduces an excessive switching losses and electromagnetic interference noise issues. This paper proposes a new control strategy for DC-DC converters, in which the non-linear EPSAC predictive control approach [4] is used to calculate the control input. The Non-linear Model based Predictive Control (NMPC) methodology. Another modern method of converter controlling is fuzzy controller which has an acceptable level of efficiency regarding the nonlinear model of converters. In fuzzy control method, the controlling action is based on some linguistic rules which can decrease the complexity of the nonlinear model.

2. THE DC –DC BUCK CONVERTER

The buck converter in Fig. 1 is powered from a single phase AC source through a diode rectifier and uses a controlled switch to elicit unidirectional power flow from input to output. The converter includes one capacitor and one inductor to store and transfer energy from the input to output. A filter is used to smooth the voltage and current waveforms. The circuit is assumed to be operating in the steady state continuous conduction mode (CCM). The capacitor is large enough to offer a constant output voltage.

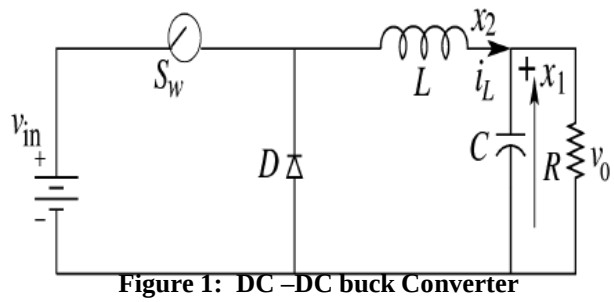

Figure 1: DC –DC buck Converter

In the description of converter operation, it is assumed that all the components are ideal and also the converter operates in CCM. In CCM operation, the inductor current flows continuously over one switching period. The switch is either on or off according to the switching function and this results in two circuit states. The first sub-circuit state is when the switch is turned on, diode is reverse biased and inductor current flows through the switch, which can be shown in figure 1.1(a). The second sub-circuit state is when the switch is turned off and current freewheels through the diode, which is shown figure 1.1(b).

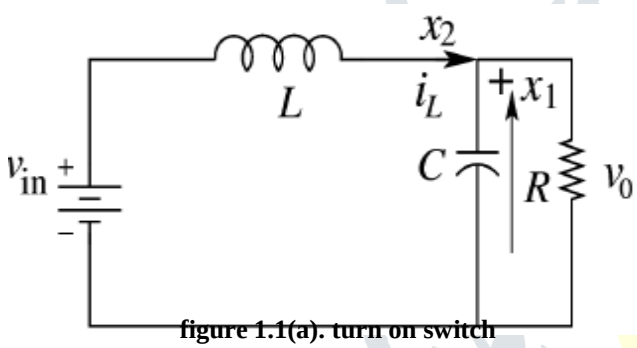

figure 1.1(a). turn on switch

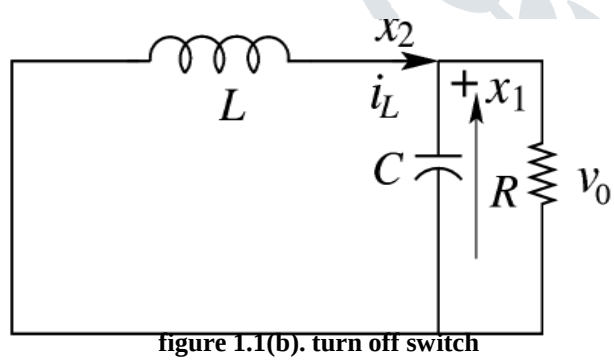

figure 1.1(b). turn off switch

When the switch S_1 is on and D is reverse biased, the dynamics of inductor current i_L and the capacitor voltage V_c are

$$\frac{di_L}{dt} = \frac{1}{L} V_m - V_o \quad \text{and} \quad \frac{dv_o}{dt} = \frac{dv_c}{dt} = \frac{1}{C} i_c \quad \text{.....(1)}$$

When the switch S_1 is off and D is forward biased, the dynamics of the are

$$\frac{di_L}{dt} = -\frac{1}{L} V_m - V_o \quad \text{and} \quad \frac{dv_o}{dt} = \frac{dv_c}{dt} = \frac{1}{C} i_c \quad \text{.....(2)}$$

When the switch S_1 is off and D is also not conducting,

$$\frac{di_L}{dt} = 0 \quad \text{and} \quad \frac{dv_o}{dt} = \frac{dv_c}{dt} = \frac{1}{C} i_c \quad \text{..... .....(3)}$$

The state space representation for converter circuit configuration can be expressed as

$$\frac{dx}{dt} = \begin{cases} A_1x + B_1U; & \text{When S is Closed} \\ A_2x + B_2U; & \text{When S is Opened.....(4)} \end{cases}$$

Where $X = [x_1, x_2]^T = [V_c \; i_L]$ is the state vector and A's and B's are the system matrices.

The state matrices and the input vectors for the ON and OFF periods are

$$A_1 = A_2 = \begin{bmatrix} -\frac{1}{RC} & \frac{1}{C} \\ -\frac{1}{L} & 0 \end{bmatrix}, \quad B_1 = \begin{bmatrix} 0 \\ \frac{1}{L} \end{bmatrix}, \quad B_2 = \begin{bmatrix} 0 \\ 0 \end{bmatrix}$$

And $U = V_{in}$ 0.

3. CONTROL METHODS

A control technique suitable for DC-DC converters must cope with their intrinsic nonlinearity and wide input voltage and load variations, ensuring stability in any operating condition while providing fast transient response. Various control techniques are there: Fuzzy logic controller, Artificial Neural Network (ANN), PID controller, PI controller, sliding mode controller. From these control methods PI, PID are linear control methods and SMC, SMC PID are the non-linear control methods. Comparison between linear and nonlinear control methods are given below. In this paper the performance and properties of the sliding mode controller, PID controller and PI controller has been focused.

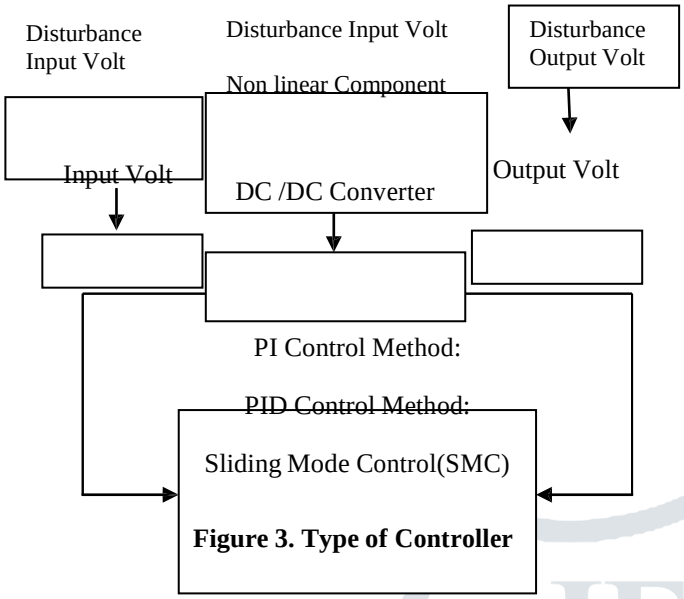

Figure 3. Type of Controller

3.1 PI-CONTROLLER

The integral term in a PI controller causes the steady-state error to reduce to zero, which is not the case for proportional-only control in general. The lack of derivative action may make the system more steady in the steady state in the case of noisy data. This is because derivative action is more sensitive to higher-frequency terms in the inputs. Without derivative action, a PI-controlled system is less responsive to real (non-noise) and relatively fast alterations in state and so the system will be slower to reach set-point and slower to respond to perturbations than a well-tuned PID system may be.

3.2 PROPORTIONAL, INTEGRAL & DERIVATIVE CONTROLLER (PID)

For control over steady state and transient errors all the three control strategies discussed so far should be combined to get proportional-integral derivative (PID) control. Hence the control signal is a linear combination of the error, the integral of the error, and the time rate of change of the error. All three gain constants are adjustable. The PID controller contains all the control components (proportional, derivative, and integral).

In order to get acceptable performance the constants K_P, K_D and K_I can be adjusted. This adjustment process is called tuning the controller. Increasing K_P and K_I tend to reduce errors but may not be capable of producing adequate stability. The PID controller provides both an acceptable degree of error reduction and an acceptable stability and damping.

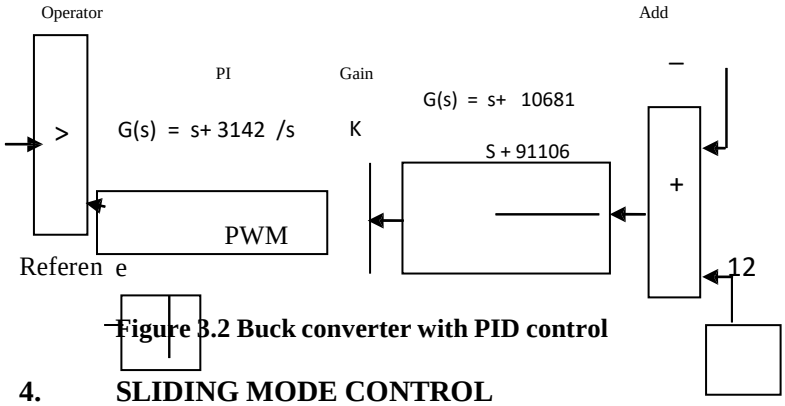

Figure 3.2 Buck converter with PID control

4. SLIDING MODE CONTROL

Sliding mode controller provides a systematic approach to the problem maintaining stability and consistence performance in the face of modeling imprecision [5]-[6]. For example, the gains in each feedback path switch between two values according to a rule that depends on the value of the state at each instant. The purpose of the switching control law is to drive the nonlinear plant's state trajectory onto a pre-specified (user chosen) surface in the state space and to maintain the plant's state trajectory for the subsequent time. This surface is called the switching surface [6]. When the plant trajectory is above the surface a feedback path has one gain and a different gain if the trajectory drops below the surface. This surface defines the rule for proper switching. This surface is also called a sliding surface (sliding manifold). Ideally, once intercepted, the switched control maintains the plants state trajectory on the surface for all subsequent time and the plants state trajectory slides along this surface. By proper design of the sliding surface, VSC attains conventional goals of control such as stabilization, tracking, regulation etc.

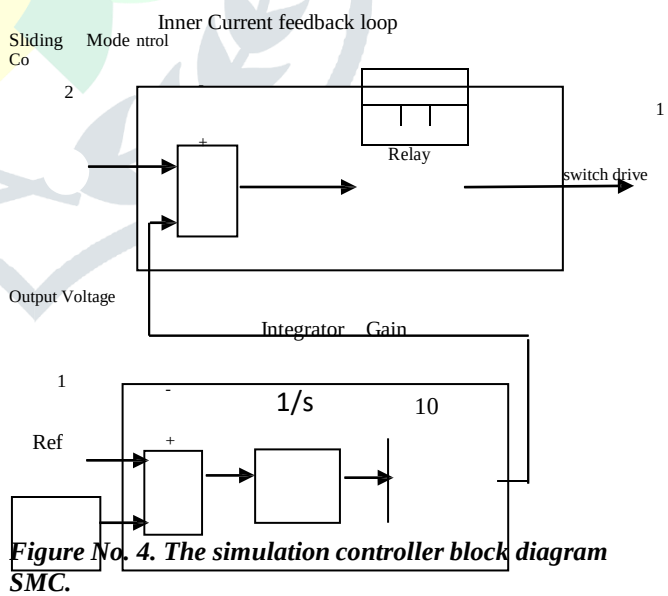

Figure No. 4. The simulation controller block diagram SMC.

4.1 BUCK CONVERTER WITH SMC SIMULATION DIAGRAM

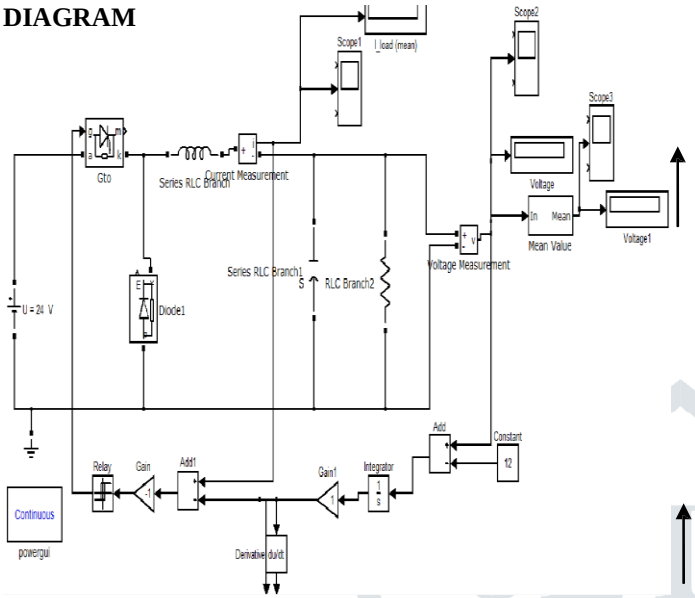

Figure No. 4.1 Simulation diagram for buck converter with SMC

TABLE - 1

LIST OF PARAMETERS

DESCRIPTION	PARAMETER	NOMINAL VALUE
Input Voltage	V_{in}	24 v
Output voltage	V_o	12 v
Capacitor	C	220 µF
Inductor	L	69 µH
Load Resistance	RL	13Ω
Nominal Switching Frequency	r	100kHz
Switch Off	SW 1	u = 0
Switch On	SW 1	u = 1

Result: For input voltage of Vin=24v,Vo=9.48.5v,Io=9.82 with linear curve.

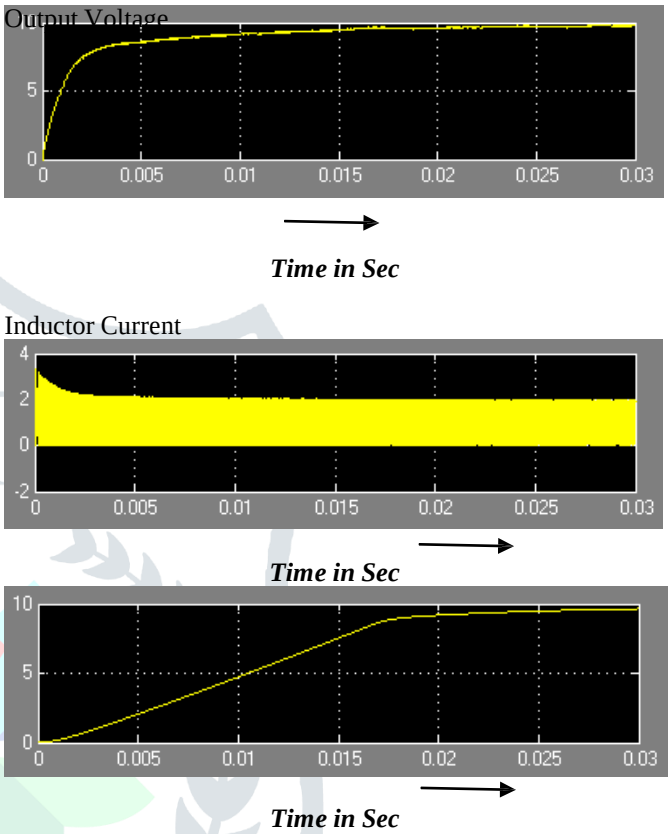

Figure. 4.2 simulation result for sliding mode controller

5. CONCLUSION

As SMC is not operating at a constant switching frequency and converters have a highly nonlinear and time varying nature therefore it is selected to control such kind of DC- DC converter. Therefore it is also selected as control technique for performance analysis. The waveforms of simulated output. voltage and current were obtained, studied and compared with the waveforms from other controllers for performance comparison. By studied references papers in details the waveforms were found to be in precise proximity of theoretical waveforms. Some concluding points which are analyzed in following points. From performance comparison of SMC with PI and PID it was found that it has large settling time. So when more voltage accuracy is required and large settling time can be considered then we can go for SMC or SMC PID control method. But when less cost, less accuracy and less complexity is required, than PI or PID control method can be used

6. REFERENCES

[1]. M.Ahmed, M.Kuisma, P. Silventoinen, "Implementing Simple Procedure for Controlling Switch Mode Power Supply Using Sliding Mode Control as a Control Technique'', XIII-th International Symposium on Electrical Apparatus and technologies (Siela). May 2003, pp 9-14, Vol. 1

[2]. Hongmei Li and Xiao Ye "Sliding-Mode PID Control of DC-DC Converter" , 5th IEEE Conference on Industrial Electronics and Applications .

[3]. V.I.Utkin, Sliding modes and their application in variable structure systems, MIR Publishers, Moscow, 1978

[4]. S. C. Tan, Y. M. Lai, C. K. Tse, and M. K. H. Cheung, "A fixed-frequency pulse-width-modulation based quasi sliding mode controller for buck converters," *IEEE Trans. Power Electron., vol. 20, no.6, pp.*1379–1392, Nov. 2005..

[5] P. Mattavelli, L. Rossetto, G. Spiazzi, and P. Tenti, "General-purpose sliding-mode controller for dc/dc converter applications," in *IEEE Power Electronics Specialists Conf. Rec. (PESC), 1993, pp. 609–615.*

[6] V. M. Nguyen and C. Q. Lee, "Tracking control of buck converter using sliding-mode with adaptive hysteresis," in *IEEE Power Electronics Specialists Conf. Rec. (PESC), 1995.*

[7] V. Utkin, J. Guldner, and J. X. Shi, Sliding Mode Control in Electromechanical Systems. London, UK: Taylor and Francis, 1999.

[8]. G. Spiazzi, P. Mattavelli, L. Rossetto, L. Malesani, "Application of Sliding Mode Control to Switch-Mode Power Supplies," Journal of Circuits, Systems and Computers (JCSC), Vol. 5, No. 3, September 1995, pp.337-354.

[9]. Siew-Chong Tan, Member, IEEE, Y. M. Lai,Member, IEEE, and Chi K. Tse, Fellow, IEEE "Indirect Sliding Mode Control of Power Converters