JETIR.ORG ISSN: 2349-5162 | ESTD Year : 2014 | Monthly Issue
JOURNAL OF EMERGING TECHNOLOGIES AND INNOVATIVE RESEARCH (JETIR)
An International Scholarly Open Access, Peer-reviewed, Refereed Journal

FPGA-BASED SIGNAL SEPARATION FOR MIMO SYSTEMS

[1]V Charishma, [2]Varshini V, [3]Arpitha E H, [4]Tejashwini M, [5] Dr Bharathi Gururaj

[1,2,3,4] Student, Department of Electronics and Communication Engineering, K. S. Institute of Technology, Bengaluru, India

[5] Assistant Professor, Department of Electronics and Communication Engineering, K. S. Institute of Technology, Bengaluru, India

Abstract: Multiple Input Multiple Output (MIMO) technology is widely used in wireless communication systems to improve data transmission speed, reliability, and spectral efficiency. In MIMO systems, multiple signals are transmitted and received through different antennas simultaneously. However, during transmission, these signals may overlap due to channel effects, interference, fading, and noise, making signal separation at the receiver difficult. This project focuses on the design and implementation of an FPGA-based signal separation system for a 2×2 MIMO communication system using Zero Forcing (ZF) and Minimum Mean Square Error (MMSE) detection techniques. QPSK modulation is used for signal transmission, while Rayleigh fading and Additive White Gaussian Noise (AWGN) are considered as channel conditions. The received signals are processed using ZF and MMSE algorithms to recover the original transmitted signals. The proposed system uses the Xilinx XC7A35T-1CSG324C Artix-7 FPGA board for hardware implementation and AMD Vivado 2026.1 for FPGA design and verification. MATLAB R2015a is used for simulation and performance analysis. The performance of both detection techniques is evaluated using parameters such as Bit Error Rate (BER), Signal-to-Noise Ratio (SNR), and computational complexity. The main aim of this project is to study and compare ZF and MMSE detection techniques and understand their effectiveness in separating mixed signals under different channel conditions. FPGA-based implementation provides an opportunity to explore parallel processing and efficient hardware realization of MIMO signal detection.

Keywords: MIMO, FPGA, Signal Separation, Zero Forcing, MMSE, QPSK, Rayleigh Fading, AWGN, BER, SNR.

I. INTRODUCTION

Wireless communication has become an important part of modern communication systems, providing high-speed data transmission and reliable connectivity. With the increasing demand for faster communication, handling large amounts of data with better efficiency has become a major requirement. Multiple Input Multiple Output (MIMO) technology is one of the important techniques used in wireless communication to improve data transmission speed, reliability, and spectral efficiency. MIMO systems use multiple antennas at both the transmitter and receiver to transmit and receive multiple data streams simultaneously through the same communication channel. In a MIMO communication system, multiple signals are transmitted from different antennas at the same time. During transmission, these signals travel through different paths and may become mixed at the receiver due to multipath fading, interference, and noise. As a result, separating the received signals and recovering the original transmitted information becomes a challenging task. Signal detection techniques are therefore required to identify and separate the individual signals from the received mixture. The accuracy of these techniques plays an important role in determining the overall performance of the communication system. Several signal detection techniques are used in MIMO systems to recover the transmitted signals. Among them, Zero Forcing (ZF) and Minimum Mean Square Error (MMSE) are commonly used detection methods. The Zero Forcing technique removes interference between transmitted signals by using the inverse of the channel matrix. However, it may amplify noise when the channel conditions are poor. The Minimum Mean Square Error technique considers both interference and noise while detecting the transmitted signals. It generally provides better performance than ZF under noisy channel conditions. Comparing these two techniques helps in understanding their advantages and limitations in MIMO signal separation. The proposed project focuses on the design and implementation of an FPGA-based signal separation system for a 2×2 MIMO communication system using ZF and MMSE detection techniques. In this system, QPSK modulation is used to generate data signals for transmission through two antennas. The transmitted signals pass through a Rayleigh fading channel, where Additive White Gaussian Noise (AWGN) is considered to represent the noise present in wireless communication. At the receiver, the mixed signals are processed using ZF and MMSE detection techniques to recover the original transmitted information. Field Programmable Gate Array (FPGA) technology is used for hardware implementation because it supports parallel processing and allows signal-processing operations to be performed efficiently. The project uses the Xilinx XC7A35T-1CSG324C Artix-7 FPGA board for implementing the signal detection system. AMD Vivado 2026.1 is used for FPGA design, synthesis, and verification, while MATLAB R2015a is used for simulation and performance analysis. The hardware implementation helps in understanding how MIMO detection algorithms can

be realized using FPGA-based digital systems. The performance of the proposed system is analysed by considering important parameters such as Bit Error Rate (BER), Signal-to-Noise Ratio (SNR), and computational complexity. BER is used to measure the number of incorrectly detected bits compared to the total transmitted bits, while SNR represents the strength of the signal compared to the noise. These parameters help in comparing the performance of ZF and MMSE detection techniques under different channel conditions and understanding their effectiveness in recovering the transmitted signals. The main aim of this project is to develop an FPGA-based MIMO signal separation system and study the performance of ZF and MMSE detection techniques. The project provides an understanding of wireless signal transmission, channel effects, signal detection algorithms, and FPGA-based hardware implementation. It also helps in identifying the suitable detection technique for reliable signal recovery and provides a foundation for developing efficient hardware-based signal-processing systems for wireless communication applications.

II. LITERATURE SURVEY

[1] J. Zhang, J. Guo, X. Li, C.-K. Wen, and S. Jin (2025) proposed *"Efficient Deployment of Deep MIMO Detection Using Learngene."* The study introduces a deep learning-based MIMO detection framework using previously trained network knowledge. It combines ZF detection outputs and channel information to improve signal detection. The approach reduces repeated training requirements and supports different system configurations. However, model training and optimization are still required.

[2] S. Enahoro et al. (2025) presented *"Multi-Beam Beamforming in 5G Massive MIMO Networks: Normalization Techniques and Algorithmic Performance Evaluation."* The study investigates power normalization and vector scaling techniques for improving beamforming performance. It considers multi-user communication and multiple-beam transmission. Performance is evaluated using SNR, BER, and throughput. However, multiple-beam processing increases computational and hardware complexity.

[3] P. Mourya and A. Varma (2025) proposed *"K-NN Assisted Soft Symbol Detection for Enhanced MIMO Reception in Next-Generation Wireless Systems."* The study uses K-Nearest Neighbor classification to identify transmitted symbols from received signal features. It aims to improve detection accuracy in noisy communication environments. The method uses feature similarities to make detection decisions. However, additional memory and processing time are required.

[4] M. Y. Daha et al. (2025) presented a scalable deep learning framework for MIMO signal detection. The framework uses neural networks to improve detection performance under different channel conditions. It is designed to support large antenna configurations while maintaining detection reliability. The study highlights the potential of deep learning for complex signal detection. However, training data and computational resources are required for implementation.

[5] L. Bhardwaj (2025) investigated *"Spectral Efficiency of Millimeter Wave Multiple-Input Multiple-Output System for Different Precoding Techniques."* The study evaluates different precoding techniques used in millimeter-wave MIMO systems. It examines their effects on spectral efficiency and data transmission performance. Suitable precoding improves throughput and bandwidth utilization. However, signal blockage and channel variations can affect communication reliability.

[6] J. Hong, Y. Kim, and H. Park (2025) proposed *"Soft Graph Transformer for MIMO Detection Approaching ML Performance."* The study introduces a graph transformer-based approach for MIMO symbol detection. It uses attention mechanisms to learn relationships between transmitted symbols. The method aims to achieve detection performance close to Maximum Likelihood detection with reduced complexity. However, training data, memory, and processing resources are required.

[7] H. Urgelles, D. Garcia-Roger, and J. F. Monserrat (2024) studied quantum-based Maximum Likelihood detection in MIMO-NOMA communication systems. The research explores quantum computing to solve complex signal detection problems. It aims to reduce the computational challenges of conventional Maximum Likelihood detection. The study investigates alternative approaches for improving MIMO detection efficiency. However, practical implementation is limited by the availability of quantum hardware.

[8] H. Liu et al. (2024) proposed an iterative lattice reduction-based detection method for MIMO communication systems. The technique transforms the channel matrix into a simpler form for signal detection. Lattice reduction helps reduce correlation between channel components. Iterative refinement is used to improve the estimated transmitted symbols and BER performance. However, repeated iterations may increase processing time.

[9] S. Chen, X. Liu, and Y. Zhang (2024) discussed the hardware implementation of massive MIMO signal processing using FPGA technology. The study focuses on channel estimation, signal detection, and decoding operations. FPGA supports parallel processing and improves hardware efficiency. The architecture aims to reduce processing delay and support high-speed communication. However, large antenna configurations require more logic resources, memory, and power.

[10] H. Q. Ngo, E. G. Larsson, and T. L. Marzetta (2024) discussed efficient signal-processing architectures for massive MIMO systems. The study focuses on reducing computational requirements in large antenna configurations. Simplified algorithms and parallel processing are used to improve processing efficiency. It highlights the importance of scalable hardware architectures for modern communication systems. However, increasing the number of antennas increases system complexity and hardware requirements.

[11] E. G. Larsson, O. Edfors, F. Tufvesson, and T. L. Marzetta (2024) presented an overview of massive MIMO technology and its applications in wireless communication. The study explains how multiple antennas improve spectral efficiency, reliability, and energy efficiency. It also discusses multi-user communication using shared antenna systems. Channel estimation, pilot contamination, and hardware complexity are identified as major challenges. The study provides a foundation for understanding MIMO technology and signal detection.

[12] Z. Zhang, X. Wang, and Y. Liu (2024) proposed a low-complexity deep learning-based detection technique for massive MIMO systems. The method uses a lightweight neural network to reduce computational operations. It aims to maintain detection accuracy while reducing processing complexity. The approach is suitable for systems with limited computational resources. However, changing channel conditions may affect detection accuracy.

[13] A. Ullah, M. A. Imran, and Q. H. Abbasi (2024) proposed a soft-output deep learning-based detection technique for coded MIMO systems. The method generates soft information about the received symbols to improve channel decoding. It aims to reduce BER and improve communication reliability. Soft-output detection provides more information than simple symbol decisions. However, higher modulation orders increase training and processing requirements.

[14] J. Surendher, T. Anil Kumar, and D. Sunehra (2023) evaluated different channel estimation methods for MIMO-OFDM communication systems. The study compares estimation techniques based on accuracy and computational complexity. Accurate channel estimation helps identify channel variations and fading effects. It improves the performance of signal detection and reduces bit errors. This work is relevant because ZF and MMSE detection depend on accurate channel information.

[15] Y. Chen et al. (2023) proposed an efficient low-complexity signal detection method using iterative feedback in MIMO systems. The approach uses information from previous detection stages to improve subsequent signal estimates. It aims to reduce detection errors and improve signal recovery. The method provides a balance between detection accuracy and computational complexity. However, repeated feedback operations may increase processing delay.

[16] J. Guo (2023) investigated low-complexity signal detection using traditional methods and neural networks for massive MIMO systems. The study combines conventional mathematical detection techniques with neural-network-based processing. Traditional methods estimate transmitted signals, while neural networks learn additional signal characteristics. This combination aims to improve detection performance while controlling computational complexity. The approach requires careful optimization of both processing stages. The study highlights the potential of combining conventional ZF and MMSE techniques with advanced processing methods.

[17] Z. Quan et al. (2023) studied efficient detection techniques for M-QAM symbols in massive MIMO communication systems. The research focuses on improving the detection of higher-order modulation symbols. It aims to maintain detection reliability while reducing computational requirements. Higher-order modulation increases data transmission efficiency by carrying more bits per symbol. However, it also increases detection complexity and sensitivity to noise. The study highlights the importance of efficient detection techniques for reliable MIMO communication.

[18] H. He, C.-K. Wen, S. Jin, and G. Y. Li (2023) proposed a data-driven deep learning approach for MIMO signal detection. The method uses neural networks to learn the relationship between received signals and transmitted symbols. It aims to improve detection accuracy under complex channel conditions. The study demonstrates the potential of deep learning as an alternative to conventional detection methods. It can learn signal characteristics from training data. However, large training datasets and considerable offline training time are required.

[19] N. Samuel, T. Diskin, and A. Wiesel (2023) presented *"Learning to Detect: Deep Learning for MIMO Detection."* The study explores deep neural networks for detecting transmitted symbols in MIMO communication systems. The approach uses training data to recover information in the presence of noise and channel interference. It demonstrates the potential of learning-based detection techniques. Deep learning can identify complex relationships between received signals and transmitted symbols. However, maintaining detection accuracy under previously unseen channel conditions remains challenging.

[20] J. Surendher, T. Anil Kumar, and D. Sunehra (2022) reviewed different channel estimation techniques used in multicarrier wireless communication systems. The study compares estimation methods based on accuracy, complexity, and suitability for different environments. Channel estimation helps determine the effects of the wireless channel on transmitted signals. Its accuracy directly influences the performance of signal detection techniques such as ZF and MMSE. The study explains the importance of selecting suitable estimation methods. Reliable channel estimation is essential for accurate MIMO signal separation.

III. RESEARCH METHODOLOGY

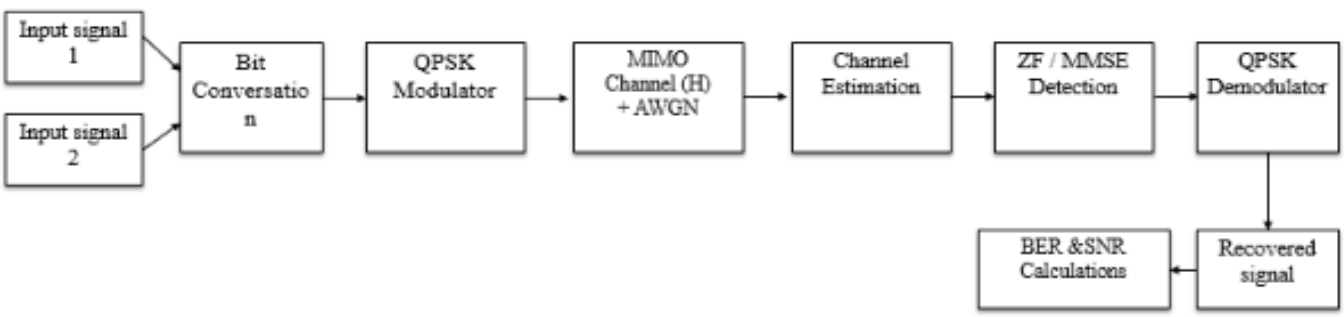

Fig. 1. Block Diagram of FPGA-Based Signal Separation For MIMO System

The methodology describes the step-by-step process used to design and implement the FPGA-based signal separation system for MIMO communication. The proposed system uses a 2×2 MIMO configuration with QPSK modulation to transmit two independent data streams through a wireless channel. During transmission, the signals are affected by channel fading, interference, and noise, which makes signal separation necessary at the receiver. The transmitted signals are passed through a Rayleigh fading channel along with Additive White Gaussian Noise (AWGN) to represent practical wireless communication conditions. At the receiver, channel information is used to recover the transmitted signals. Two detection techniques, Zero Forcing (ZF) and Minimum Mean Square Error (MMSE), are considered for separating the mixed signals. The detection process is designed using FPGA hardware to support faster and parallel signal processing. MATLAB is used for simulation and performance analysis, while Verilog and Xilinx Vivado are used for FPGA design and verification. The performance of both detection techniques is evaluated by comparing the recovered signals and analysing parameters such as Bit Error Rate (BER), Signal-to-Noise Ratio (SNR), and computational complexity.

Signal Generation
Two independent sine-wave signals of 10 Hz and 20 Hz are generated with a sampling frequency of 1000 Hz.

Quantization and Binary Conversion
The generated signals are quantized into 8-bit digital values and converted into binary data for digital processing.

QPSK Modulation
Binary data is grouped into 2-bit pairs and mapped to QPSK symbols. Signals are transmitted through TX1 and TX2.

2×2 MIMO Channel
QPSK signals pass through a 2×2 Rayleigh fading MIMO channel with AWGN noise.

Channel Information
Channel matrix H, SNR and channel condition are used to characterize the channel.

ZF & MMSE Detection
Mixed received signals are separated using ZF and MMSE detection .

ZF – Zero Forcing- ZF is a linear detection technique used to separate the mixed signals at the receiver. It uses the pseudo-inverse of the MIMO channel matrix to cancel interference between transmitted signals.

MMSE – Minimum Mean Square Error- MMSE is a linear detection technique that considers both interference and noise. It introduces the noise-power term into the detection process.

Adaptive Detection
Adaptive detector is developed and evaluated in MATLAB to select ZF or MMSE based on SNR and channel condition.

QPSK Demodulation
Detected QPSK symbols are converted back into binary data using the I/Q signs.

Signal Reconstruction
Recovered binary data is converted back to signal values to reconstruct the original 10 Hz and 20 Hz signals.

Performance Evaluation
System performance is evaluated using BER and MSE.

FPGA Verification
Required signal-processing and detection modules are implemented in Verilog and functionally verified using Xilinx Vivado simulation. Fixed-point detector coefficients are used for FPGA processing.

FPGA Build
The FPGA design is synthesized, implemented, End-to-end functional verification is performed through Vivado behavioral simulation.

3.1 Working Flow Chart
The flowchart represents the working procedure of the proposed FPGA-based MIMO signal separation system using Zero Forcing (ZF) and Minimum Mean Square Error (MMSE) detection techniques. It explains the stages of data generation, modulation, transmission, signal detection, demodulation, and performance evaluation.
Initially, two independent binary data streams are generated and passed through the QPSK modulation block, where every two bits are converted into one symbol. The modulated signals are assigned to two transmitting antennas using MIMO symbol mapping in a 2×2 MIMO configuration.
The transmitted signals pass through the MIMO channel matrix (H), where AWGN noise is added to represent channel disturbances. At the receiver, channel estimation is performed to obtain the channel information required for signal detection.

Next, ZF and MMSE detection algorithms are applied to separate the received mixed signals. ZF reduces inter-channel interference, whereas MMSE considers both interference and noise to improve signal estimation. The recovered symbols are then passed through QPSK demodulation to obtain the original binary data.

The recovered bits are compared with the transmitted bits to check their correctness. Finally, system performance is evaluated using Bit Error Rate (BER) and Signal-to-Noise Ratio (SNR). The results are used to analyse and compare the performance of ZF and MMSE detection techniques.

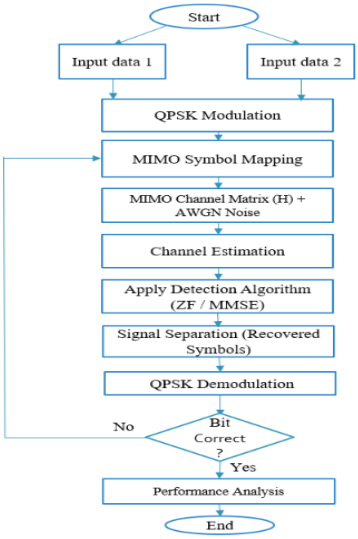

Fig. 2. Flow Chart of the proposed MIMO signals separation system

IV. Results and Discussion

The proposed project focuses on FPGA-based signal separation in a 2×2 MIMO communication system using Zero Forcing (ZF) and Minimum Mean Square Error (MMSE) detection techniques. The system processes two independent input data streams using QPSK modulation and transmits them through a MIMO channel. During transmission, Rayleigh fading and Additive White Gaussian Noise (AWGN) are considered to study the effects of wireless channel conditions on the received signals.

At the receiver, the mixed signals are processed using ZF and MMSE detection algorithms to separate the individual transmitted signals. The detected symbols are then demodulated to recover the original binary data. The recovered data is compared with the transmitted data to identify errors and analyse the accuracy of signal detection.

The performance of both detection techniques is evaluated using parameters such as Bit Error Rate (BER) and Signal-to-Noise Ratio (SNR). The ZF technique reduces interference between the received signals but may be affected by noise under poor channel conditions. The MMSE technique considers both interference and noise, which can provide better detection performance in noisy environments. Their performance can be compared under different SNR conditions to understand their effectiveness.

The hardware design uses the Xilinx XC7A35T-1CSG324C Artix-7 FPGA board, with Verilog HDL for digital circuit design and AMD Vivado 2026.1 for simulation, synthesis, and implementation. MATLAB R2015a is used for signal generation, channel modelling, and performance analysis. The FPGA resource utilization and processing performance can also be examined to understand the hardware requirements of the proposed system.

4.1 Matlab Simulation

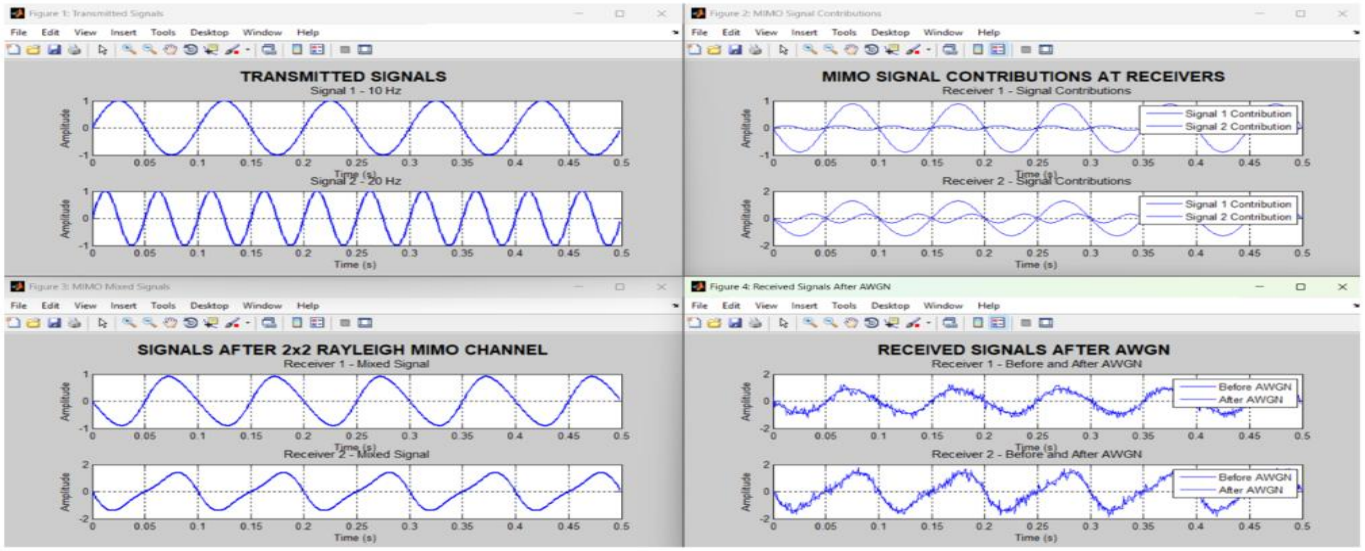

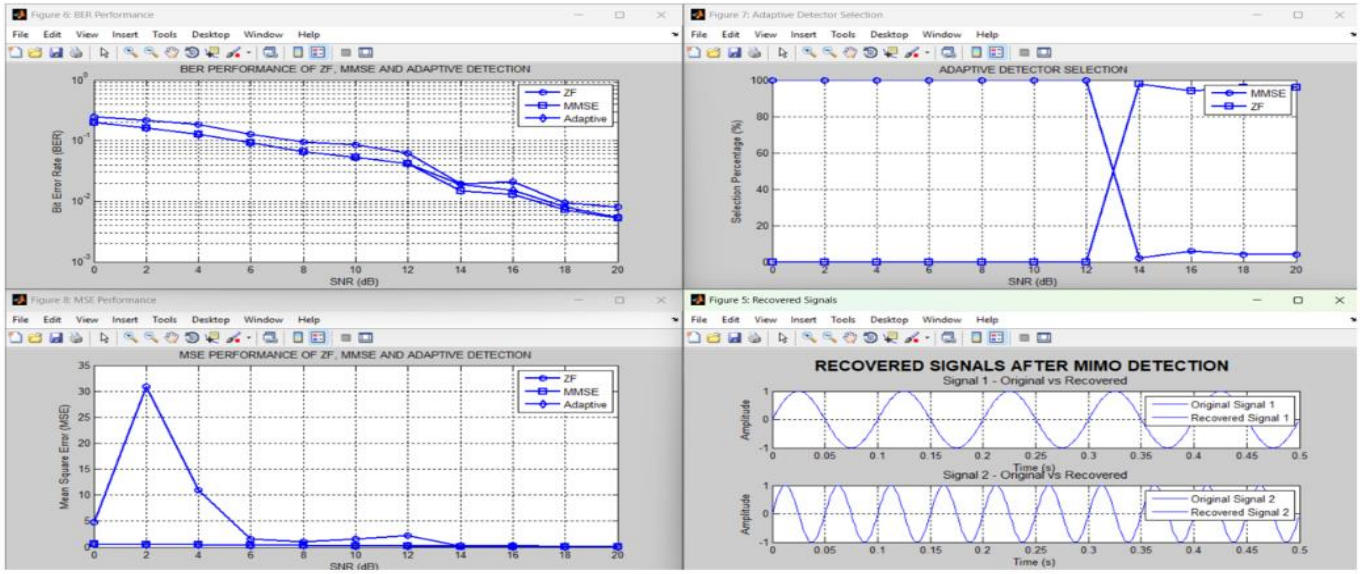

Figure 3: MATLAB Simulation Results of MIMO Signal Transmission, Detection and Recovery.

The above figure shows the MATLAB simulation results of the proposed FPGA-Based Signal Separation for MIMO Systems. It illustrates the transmitted signals, MIMO channel effects, addition of noise, performance comparison of detection techniques, and recovery of the original signals. The simulation considers two input signals with different frequencies and evaluates their behaviour during transmission and reception through a 2×2 MIMO communication system.

Transmitted Signals

The first graph shows the two original transmitted signals before passing through the MIMO channel. Signal 1 has a frequency of 10 Hz, while Signal 2 has a frequency of 20 Hz. Both signals are generated independently and have different waveforms. These signals are used as inputs to study the transmission and signal separation process.

MIMO Signal Contributions at Receivers

The second graph represents the contributions of both transmitted signals at the two receiving antennas. In a 2×2 MIMO system, each receiving antenna receives contributions from both transmitting antennas. Therefore, the received signals contain a combination of the transmitted signals. This demonstrates how multiple signals travel through the wireless channel and become mixed at the receiver.

Signals After 2×2 Rayleigh MIMO Channel

The third graph shows the signals after passing through the 2×2 Rayleigh fading MIMO channel. The channel affects the amplitude and phase of the transmitted signals during propagation. The signals received at Receiver 1 and Receiver 2 show the combined effects of the wireless channel. This stage represents the changes that occur during wireless signal transmission.

Received Signals After AWGN

The fourth graph shows the received signals before and after adding Additive White Gaussian Noise (AWGN). The original received signals are compared with the noisy signals. The presence of AWGN introduces random variations in the signal waveform. This graph demonstrates how noise affects the quality of the received signals and makes accurate signal detection more challenging.

BER Performance

The fifth graph represents the Bit Error Rate (BER) performance of ZF, MMSE, and Adaptive detection techniques at different SNR values. The graph shows that BER generally decreases as SNR increases. This means that signal detection becomes more accurate when the signal strength is higher compared to the noise level. The graph also helps compare the performance of the three detection techniques under different noise conditions.

Adaptive Detector Selection

The sixth graph illustrates the selection percentage of ZF and MMSE detection techniques at different SNR values. It shows how the adaptive detector selection changes according to the signal conditions. The selection percentage indicates which detection technique is chosen for a particular SNR condition. This helps demonstrate the use of adaptive selection for improving the detection process.

MSE Performance

The seventh graph represents the Mean Square Error (MSE) performance of ZF, MMSE, and Adaptive detection techniques. MSE measures the difference between the original signal values and the estimated signal values. The graph shows a noticeable increase in MSE for the adaptive technique at a low SNR value, followed by a reduction at higher SNR values. This comparison helps analyse the accuracy of the detected signals.

Recovered Signals After MIMO Detection

The final graph shows the original signals and the recovered signals after applying MIMO detection. Signal 1 and Signal 2 are reconstructed at the receiver, and their waveforms are compared with the original transmitted signals. The close overlap between the

original and recovered waveforms indicates that the detection process is able to recover the transmitted signals with good accuracy under the simulated conditions.

4.2 Vivado Simulation

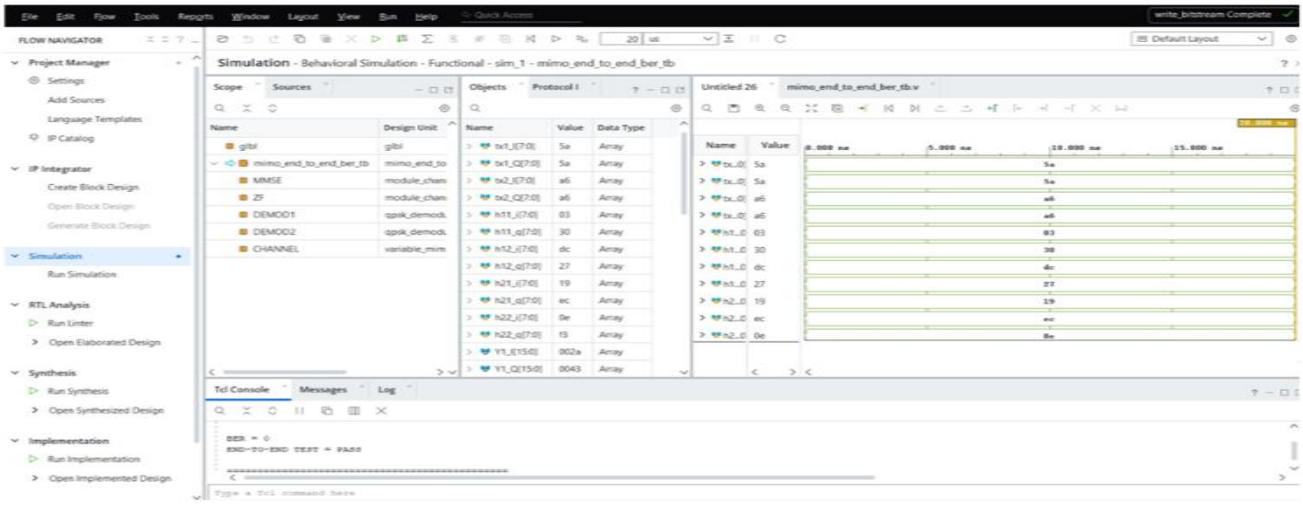

Figure 4: Vivado Behavioral Simulation Output of FPGA-Based MIMO Signal Separation

The above screenshot shows the behavioral simulation output of the FPGA-Based Signal Separation for MIMO Systems using AMD Vivado 2026.1. The simulation is performed using the testbench named mimo_end_to_end_ber_tb, which is designed to verify the complete operation of the proposed MIMO signal-processing system. It helps to check the functionality of different modules and ensure that the designed system produces the expected outputs for the applied test inputs.

The left side of the Vivado window displays the design hierarchy and the different modules used in the project. These include the MMSE detection module, ZF detection module, DEMOD1, DEMOD2, and CHANNEL. Each module performs a specific function in the overall system. The channel module represents the channel-related processing, while the ZF and MMSE modules perform signal detection. The demodulation modules are used to convert the detected symbols back into digital data.

The centre section of the screenshot displays the objects and their corresponding values. These values represent the internal signals and variables used during the simulation. They help observe the data being processed by different modules. By checking these values, the functionality of the individual blocks can be verified and their outputs can be compared with the expected results.

The waveform window on the right side displays the digital signal values at different simulation time intervals. It shows the changes in signal values during the execution of the testbench. The waveforms help in observing the signal behaviour and understanding how the data moves through the different stages of the system. They also help identify whether the output values are generated correctly according to the applied input conditions.

The Tcl Console at the bottom of the screenshot displays the final simulation results. It provides important information about the verification of the complete design. The main results displayed are:

- BER = 0: The Bit Error Rate is zero for the tested input data. This indicates that no bit errors were detected during this simulation test and that the recovered data matches the transmitted data for the tested case.
- END-TO-END TEST = PASS: This message confirms that the complete testbench verification has passed successfully.
- Signal Verification: The displayed waveform values and internal signal values help verify the operation of the different modules involved in the MIMO signal-processing system.
- Behavioral Simulation: The simulation checks the logical functionality of the design before proceeding with further FPGA implementation stages.

The successful simulation indicates that the integrated design has passed the applied testbench conditions. The ZF and MMSE detection modules are included in the design to process the received MIMO signals and recover the transmitted information. The simulation provides a way to verify the operation of these modules along with the channel and demodulation blocks. It also helps identify logical errors during the development stage, making it easier to improve the design before hardware implementation.

4.3 FPGA Hardware Results

The following images show the hardware output of the proposed FPGA-based MIMO signal separation system. The seven-segment display is used to indicate the selected signal detection technique. According to the output mapping used in the project, 1 represents MMSE detection and 0 represents ZF detection.



Figure 5: FPGA Hardware Output Showing MMSE Detection Selection (Output = 1).

MMSE Detection Output (Display: 1)
The first image shows the FPGA board displaying the output value 1, which represents the selection of the Minimum Mean Square Error (MMSE) detection technique. In this mode, the system selects the MMSE algorithm for MIMO signal detection and separation. MMSE considers both noise and interference while estimating the transmitted signals. The output displayed on the seven-segment display indicates that the MMSE detection mode has been selected successfully. This demonstrates the hardware output corresponding to the MMSE selection in the proposed system.



Figure 6: FPGA Hardware Output Showing ZF Detection Selection (Output = 0).

ZF Detection Output (Display: 0)
The second image shows the FPGA board displaying the output value 0, which represents the selection of the Zero Forcing (ZF) detection technique. In this mode, the system selects the ZF algorithm to separate the mixed signals received through the MIMO channel. The ZF technique reduces interference between the transmitted signals by using the estimated channel information. The seven-segment display indicates that the ZF detection mode has been selected. This demonstrates the hardware output corresponding to the ZF selection in the proposed system.

REFERENCES

[1] J. Zhang, J. Guo, X. Li, C.-K. Wen, and S. Jin, "Efficient Deployment of Deep MIMO Detection Using Learngene," IEEE Trans. Wireless Commun., 2025.
[2] Enahoro, Sunday & Sunday, Ekpo & Chow, K. K. & ji, Helen & Karimian, Noushin & Uko, Mfonobong & Elias, Fanuel & Unnikrishnan, Rahul & Olasunkanmi, Nurudeen & Alabi, Stephen. (2025). Multi-Beam Beamforming in 5G Massive MIMO Networks: Normalization Techniques and Algorithmic Performance Evaluation. IEEE Access. PP. 1-1. 10.1109/ACCESS.2025.3627426.
[3] P. Mourya and A. Varma, "K-NN Assisted Soft Symbol Detection for Enhanced MIMO Reception in Next-Generation Wireless Systems," International Journal of Engineering Development and Research (IJEDR), vol. 13, no. 4, pp. 55–62, Dec. 2025.
[4] M. Y. Daha, A. Sudhakaran, B. Babu, and M. U. Hadi, "Enabling Intelligent 6G Communications: A Scalable Deep Learning Framework for MIMO Detection," Telecom, vol. 6, p. 58, Aug. 2025.
[5] L. Bhardwaj, "Spectral Efficiency of Millimeter Wave Multiple-Input Multiple-Output System for Different Precoding Techniques," International Journal of Computational Methods and Experimental Measurements, vol. 13, no. 2, pp. 323–329, Jun. 2025.
[6] A. Trimeche, A. Sakly, and A. Mtibaa, "FPGA Implementation of ML, ZF and MMSE Equalizers for MIMO Systems," Procedia Computer Science, vol. 73, pp. 226–233, 2015.

[7] J. Hong, Y. Kim, and H. Park, "Soft Graph Transformer for MIMO Detection Approaching ML Performance," IEEE Access, vol. 13, pp. 1–12, 2025.
[8] H. Urgelles, D. Garcia-Roger, and J. F. Monserrat, "Quantum-Based Maximum Likelihood Detection in MIMO-NOMA Systems for 6G Networks," *Quantum Reports*, vol. 6, no. 4, pp. 533–549, 2024.
[9] H. Liu, X. Cheng, W. Li, F. Feng, L. Wang, and Y. Xiao, "A Novel Iterative Detection Method Based on a Lattice Reduction-Aided Algorithm for MIMO-QPSK Systems," Scientific Reports, vol. 14, 2024.
[10] S. Chen, X. Liu, and Y. Zhang, "Hardware Implementation of Massive MIMO Signal Processing Using FPGA," IEEE Trans. Circuits Syst., 2024.
[11] H. Q. Ngo, E. G. Larsson, and T. L. Marzetta, "Efficient Massive MIMO Signal Processing Architecture for 5G Networks," IEEE Trans. Wireless Commun., 2024.
[12] E. G. Larsson, O. Edfors, F. Tufvesson, and T. L. Marzetta, "Massive MIMO for Next Generation Wireless Systems," IEEE Commun. Mag., 2024.
[13] Z. Zhang, X. Wang, and Y. Liu, "Low-Complexity Deep Learning-Based Detection for Massive MIMO Systems," IEEE Access, 2024.
[14] A. Ullah, M. A. Imran, and Q. H. Abbasi, "Soft-Output Deep Learning-Based Detection for Coded MIMO Systems," IEEE Access, 2024.
[15] Y. Chen, Y. Tang, B. Jiang, Y. Zhao, J. Bao, and X. Tang, "Efficient and Low-Complex Signal Detection with Iterative Feedback in MIMO Systems," IEEE Sensors Journal, vol. 23, no. 24, pp. 9798–9805, 2023.
[16] J. Guo, "Low Complexity Signal Detection Based on Traditional Methods and Neural Networks for Massive MIMO Systems," Applied and Computational Engineering, vol. 5, 2023.
[17] Z. Quan, J. Luo, H. Zhang, and L. Jiang, "Efficient Massive MIMO Detection for M-QAM Symbols," Entropy, vol. 25, no. 3, 2023.
[18] H. He, C.-K. Wen, S. Jin, and G. Y. Li,"Deep Learning-Based MIMO Detection: A Data-Driven Approach,"IEEE Trans. Wireless Commun., vol. 22, no. 6, pp. 3502–3516, 2023.
[19] N. Samuel, T. Diskin, and A. Wiesel,"Learning to Detect: Deep Learning for MIMO Detection,"IEEE Trans. Signal Process., vol. 71, pp. 252–266, 2023.
[20] D. Mineev, E. Bobrov, and V. Kuznetsov, "On the Interference Cancellation by Reduced Channel Zero-Forcing Class of Precodings in Massive MIMO Systems," arXiv preprint, 2022.