ABRASIVE PIPE CLEANING

Authors Name: Nikhil Chormale
Author's Name: Akash Dhavade
Author's Name: Srushti Pathare
Dept. name of organization: Smt. Kashibai Navale College of engineering, Pune.
Name of organization: SKNCOE
City, Country: Pune, India

***Abstract*—Abrasive blasting, more commonly known as sandblasting, is the operation of forcibly propelling a stream of abrasive material against a surface under high pressure to smooth a rough surface, roughen a smooth surface, shape a surface or remove surface contaminants. A pressurized fluid, typically compressed air, or a centrifugal wheel is used to propel the blasting material (often called the media). The first abrasive blasting process was patented by Benjamin chew tilghman on 18 October 1870.**

There are several variants of the process, using various media; some are highly abrasive, whereas others are milder. The most abrasive are shot blasting (with metal shot) and sandblasting (with sand). Moderately abrasive variants include glass bead blasting (with glass beads) and mediablasting with ground-up plastic stock or walnut shells and corncobs. Some of these substances can cause anaphylactic shock to both operators and passers by a mild version are soda blasting (with baking soda). In addition, there are alternatives that are barely abrasive or nonabrasive, such as ice blasting and dry-ice blasting.

I. INTRODUCTION

Suitable for all kind of pipes bent, half bent or straight. After each smoke, let the pipe cool. Then, remove the stem, using turning, not pulling, and motion. Run a pipe cleaner or two through the stem until it comes out clean. Abrasive blasting, more commonly known as sandblasting, is the operation of forcibly propelling a stream of abrasive material against a surface under high pressure to smooth a rough surface, roughen a smooth surface, shape a surface or remove surface contaminants. A pressurized fluid, typically compressed air, or a centrifugal wheel is used to propel the blasting material. The first abrasive blasting process was patented by Benjamin Chew Tilghman on 18 October 1870.

There are several variants of the process, using various media some are highly abrasive, whereas others are milder. The most abrasive are shot blasting and sandblasting. Moderately abrasive variants include glass bead blasting and media blasting with ground-up plastic stock or walnut shells and corncobs. Some of these substances can cause anaphylactic shock to both operators and passersby. A mild version is soda blasting In addition, there are alternatives that are barely abrasive or nonabrasive, such as ice blasting and dry-ice blasting.

Abrasive Blasting History and Advances Tilghman patented a process known as abrasive (grit) blasting on October 18, 1870, defining the process as "cutting, boring, grinding, dressing, pulverizing, and engraving stone, metal, glass, wood, and other hard of solid substances, by means of sand or grains of quartz, or other suitable materials, artificially driven as projectiles rapidly against them by any suitable method of propulsion". A simple representation of the blasting process with an unlisted or "smooth" surface, during blasting, and a blasted "profiled" surface.

The particles are propelled against the surface via a flow of liquid and/or gas. Tilghman describes methods of propelling the particles against the substrate as follows, "by a rapid jet or current of steam, air, water, or other suitable gaseous or liquid media; but any direct propelling force may be used, as, for example, the blow of the blades of a rapidly-revolving fan, or a centrifugal force of a revolving drum or tube, or any other suitable machine". The industrial world started to use this blasting application to clean large surfaces in 1893. "Thomas Pang born expanded on Tilghman's ideas in 1904 to create a new machine that used compressed air, which it combined with an abrasive material like sand, in order to clean metal surfaces for further use". This newer sand blasting machine utilized the combination of a blasting nozzle and air compressor to better control the amounts of air and particles released during the process. An enclosure was first utilized in 1918 due to health concerns with silicosis caused by inhalation of tiny sand particles. The process continued to evolve, in 1939, with "particles derived from aluminum oxide, silicon carbide, quartz, glass beads, powdered abrasives, plastic abrasives, copper slag, steel grit, coconut shells, walnut shells, and fruit stones were put into use" .Other safety enhancements that helped improve the blasting process for workers were glass viewing screens, dust collection systems, and use of hearing protection and respirators.

Along with media selection and process safety improvements, the abrasive process was eventually automated to produce better control of the process. In 1968, Progressive Engineering Company built its first automated abrasive grit blasting system and by 1972, the company had created its first pneumatic blasting product for the shot preening process. The latest blasting process improvement was the introduction of the robotic, ultra-high-pressure water stripping systems in 1992. Today, Wheelabrator (created with the help of Tilghman's research and invention) and Empire are two large blasting cabinet manufacturers that have become world leaders in the abrasive blasting for the purposes of surface roughening, cleaning, material removal, texturing, and debarring.

II. CONCEPTUAL DIAGRAM

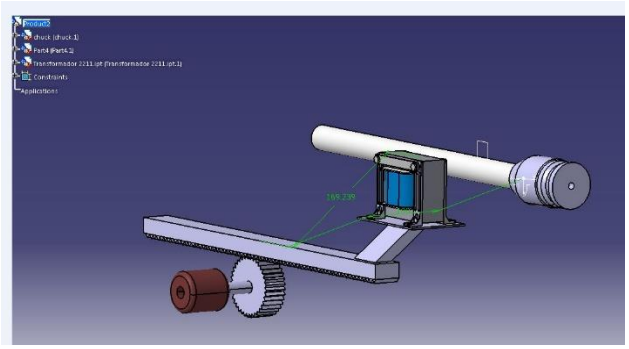

III. LITERATURE SURVEY

1. Review on Shot Blasting Processes Mitul Malli

Shot blasting is a surface cleaning and finishing process. This review paper includes basic components and significance of the typical shot blasting machine. The whole process has been explained herein along with the broad classification of its different types. A couple of methods have been described viz swinging table and tumblast. The drawbacks of tumblast are concluded hence.

2. Technical andeconomicalcomparison of water jetand abrasive blast methods to be used in de-coating and cleaningprocess

This paper presents a research that has been done in order to make a comparison between the water jet and abrasive blast techniques, two popular de-coating and cleaning method. This study addresses both technical and economic concerns. Technical part includes surface cleanliness, substrate surface roughness and environmental issues. Economic comparison investigates the equipment, operational, utilities, waste disposal and maintenance costs.

3. Abrasive Blasting with Post-Process and In-Situ Characterization Robert Jeffrey Mills

Abrasive blasting is a common process for cleaning or roughening the surface of a material prior to the application of a coating. Although the process has been in practice for over 100 years, the lack of a comprehensive understanding of the complex interactions that exist with the process can still yield an inferior surface quality.

4. The Effectiveness of Power Tool Cleanings an Alternative to Abrasive Blasting

The objectives of this research were to review the state-of-the-art of power tool cleaning methods; to evaluate the surfaces they produce and their effect upon the performance and durability of ship coating systems; and to compare ship production costs using these methods with those of abrasive blasting.

IV. CALCULATIONS:

Rack and pinion

Given data:

T1=45

T2=2

D=40

R=20

Solution:

Module=$\frac{pitch}{\pi}=\frac{5}{\pi}$=1.59=2

Addendum=m=2 mm

Least pressure angle to avoid interference:

Let,

Φ=least pressure angle to avoid interference

Addendum=$r\sin^2\varphi$

$2=20\sin^2\varphi$

Φ=18.434

Length of the arc of contact:

Length of the path of contact=

$$\sqrt{(r+addendum)^2-(r\cos\emptyset)^2}$$

$$=\sqrt{(20+2)^2-(20\cos 18.434)^2}$$

=11.13 mm

Therefore,

Length of the arc of contact=$\frac{length\ of\ the\ path\ of\ contact}{\cos\emptyset}$

=11.73 mm

Minimum no. Of teeth:

Circular pitch=P_c=πd/t

=π*40/20

=6.28 mm

Therefore,

The no. of pairs of teeth in contact=$\frac{length\ of\ arc\ of\ contact}{circular\ pitch}$

=11.73/6.28

=1.78

So minimum no. of teeth in contact is 2or **1** pair.

Pinion

Power transmitted= $\frac{2\pi NT}{60}=\frac{2\pi NT}{60}$

=6.8 W

Torsional moment=$\frac{60*10^6*kW}{2\pi n}$

$=\frac{60*10^6*6.5*10\hat{}-3}{2\pi*1}$

=14026N-mm

Tangential force act on pinion=$P_t=\frac{2Mt}{d}$

=2*14026/4

=701.3 N

Radial force act on pinion=P_r= $P_t$tanα

=701.3*tan20

=255 N

Addendum =h_f=m=2mm

Dedendum (h_f) =1.25 m=1.25*2=2.5mm

Clearance(C) =0.25*m=0.25*2=0.5mm

Working Depth (h_k) =2m=4mm

Whole depth (h) =2.25m=2.25*2=4.5mm

Tooth thickness(s) =1.5708m=3.1416mm

Tooth space=1.5708 m=3.1416mm

Fillet radius=0.4 m=0.8 mm

V.ADVANTAGES

A WIDE RANGE OF USES

Abrasive blasting is ideal for removing:

1) Rust
2) Paint
3) Graffiti
4) Stains from timber

VI. APPLICATIONS

1) Clean a surface by removing unwanted rust, scale, paint, etc., inpreparation for painting, anodizing, welding, or other processes which require a clean surface.
2) Deburr, remove tooling marks, or otherwise finish a crude product.
3) Change metallurgical properties or stress relieve a part by the peening action of multiple impactions.
4) Produce a desired matte or decorative finish.
5) Micro blasting of cutting tips and tools is a very effective and reliable method of advancing the life of tools under the action of turning, milling, drilling, punching and cutting.
6) The lettering and engraving on most modern cemetery monuments and markers is created by abrasive blasting.

VII. CONCLUSION

As a conclusion it can be said, that the field of cleaning confined spaces and interior surfaces formulates a number of specific requirements, which are not met by the existing commercial products. So far, still lowering a worker inside the space is the most used technology and only some special solutions in terms of robotic prototypes exist which are limited to a specific setup or certain environments. Therefore, further research in the future to design a specialized robot for the cleaning and sanitation in large confined space has to be achieved.

REFERENCES

1. Mitul Malli et.al [2014], "Review on Shot Blasting", International Journal for Scientific Research & Development.
2. Pankaj Bansal et.al [2014], "Aspect for Shot Blasting over pickling for metal drawing process", International Journal of Mechanical and Production Engineering.
3. R. Lewis et.al [2007], "Particle Motion and Stain removal Simulated Abrasive tooth cleaning",
Universities of Leeds, Sheffield and York.
4. Ahmad Naeem et.al [2015], "Denture Hygiene: A Short Note on Denture Cleansers", Journal on science.
5. C. Krishnakumar et.al [2016], "HSE Assessment and Improvement in Shot Blasting Process", IOSR Journal of Mechanical and civil Engineering.