Development of Advance Smart Electric Vehicle using Hybrid Energy Storage System

[1]Mr. Shobhit K Khandare, [2]Mr. Wilson Alen, [3]Mr. Akshay Bhopani, [4]Mr. Kalpesh Kolhe, [5]Ms. Sakshi Potdar

[1]Asst. Professor, [2,3,4,5]BE Student

[1,2,3,4,5]Department of Electronics and Telecommunication Engineering

[1,2,3,4,5]V.E.S.I.T, Chembur, Mumbai-400 074, India

Abstract :
Hybrid Electric Vehicles (HEVs) utilize electric sources power as well as mechanical engine for propulsion. The performance of HEVs is directly proportional to the characteristics of the Energy Storage System (ESS). The requirement that an ESS for HEVs should have are high power performance, long life cycle, reliability and cost effective. So the Hybrid Energy Storage System (HESS), which combines different kinds of storage devices has been considered to fulfill both performance and cost requirements. In this paper a hybrid power system is designed with solar energy, wind energy and plug-in charge whose energies are stored in a rechargeable battery.

Index terms: Electric vehicle, energy storage, battery storage and remote controlling

I. INTRODUCTION

Combination of different but complementary energy generation systems based on renewable energies or mixed is known as hybrid system. In this paper a hybrid power system is designed with wind energy, solar energy and plug-in source. Nowadays, so many people are facing major problems due to non-renewable source of energy. Non-renewable sources like petrol and diesel are getting extent due to continuous use and the price of these products is reaching sky. So through this project came up with an idea of using renewable, environment friendly, cost efficient alternate sources of fuel for car.

II. LITERATURE SURVEY

A) Existing System
Existing hybrid electric vehicle (HEV) system is a type of hybrid vehicle that combines a conventional internal combustion engine (ICE) system with an electric propulsion system (hybrid vehicle drive train). The presence of the electric power train is intended to achieve either better fuel economy than a conventional vehicle or better performance. There is a variety of HEV types, and the degree to which each function as an electric vehicle (EV) also varies. The most common form of HEV is the hybrid electric car, although hybrid electric trucks (pickups and tractors) and buses also exist. This saves fuel and adds a extra backup to fuel based vehicle. But these vehicles are expensive, and maintenance and longevity is kind of hit or a mess.

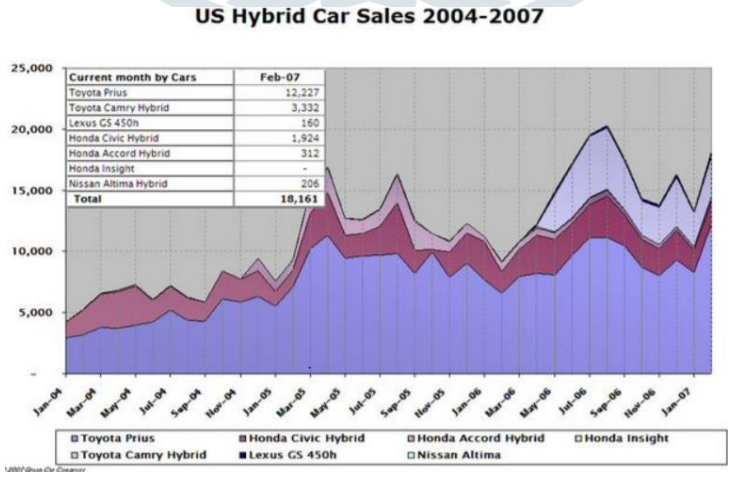

Fig.1: Hybrid car sales in US [10]

As of 2017 sales report [4], over 12 million hybrid vehicles have been sold worldwide since their inception in 1997. As of April 2016, Japan ranked as the market leader with more than 5 million hybrid vehicles sold. Next in the list is the United States of America with approximate sale of over 4 million units, followed by Europe with about 1.5 million hybrid vehicles delivered since 2000. This number is expected to be three times the current scenario with the ability to run on renewable resources. This will completely revolutionize the automotive industry. Although petrol is widely used for passenger vehicles, the diesel engine is inherently more

efficient than a conventional petrol engine. For the average passenger car fuel savings are around 20%. Advanced cleaner diesel vehicles now include emission control technologies to lower tailpipe emissions, including harmful particulate matter.

B) Emerging Technologies

The rapid growth and development of HEVs has also spurred the development of other emerging technologies that share critical components (e.g. Electric motors with batteries) with HEVs, i.e. Plug-in hybrids and fuel cell vehicles require technologies for electric propulsion. However, as these emerging technologies are still expensive and require a reliable supply of electricity or hydrogen. These technologies yet not expected to be enrolled in developing countries soon.

III. SUMMARY OF THE LITERATURE REVIEW

By the investigation of the global growth of population and vehicles in the next 50 years, the global population will increase from 6 billion in 2000 to 10 billion in 2050, and the global vehicles will increase from 700 million to 2.5 billion consequently. If all vehicles are powered by internal combustion engines, the gasoline and diesel oil will be depleted quickly, and the emission will result in greenhouse effect. So, the energy conservation and environmental protection are growing concerns around the world. After receiving various journal papers, it was found that owing to recent pressures towards greenhouse gas reduction, as well as rising oil prices, the interest in environment friendly and highly efficient vehicles such as HEVs, Plug-in HEVs and EVs has increased. Since the world's first HEVs was HEV Toyota Prius in 1997. Various types of HEVs such as mild, soft, hard and plug-in types have been developed and sold while meeting the regulations and/or the needs of customers. So through this project model we came up with an idea of using renewable and storable sources of energy which are environment friendly, cost efficient and an alternate option of fuel

IV. OBJECTIVE OF PROPOSED CONCEPT

The biggest advantage of HEV over gasoline powered car is that it has cleaner emissions and causes less harm to the environment. It has various financial benefits as it is supported by many incentives and credits. Thus, HEVs are affordable. Also, HEV has a higher resale value as the demand of electric vehicles is growing day by day owing to the environmental issues.
HEVs are particularly effective for urban travel, significantly lowering pollutant emissions and providing cost-effective CO2 reductions in personal mobility. Encouraging hybridization of vehicle fleets through enabling policies and incentive structures can serve to lower both conventional and CO2 emission, thus improving public health, energy security, and reducing fuel costs. Continuing innovation in hybrid technology and a growing demand for cleaner vehicles will mean that costs are likely to fall, particularly in second hand vehicle markets. To design and implement a smart electric vehicle using HESS in order to minimize the problem of environmental pollution and to preserve non-renewable resources i.e. fuel. For this we are implementing a vehicle which uses renewable resources such as solar energy and wind energy by which the vehicle will emit cleaner emissions.

V. PROPOSED BLOCK DIAGRAM

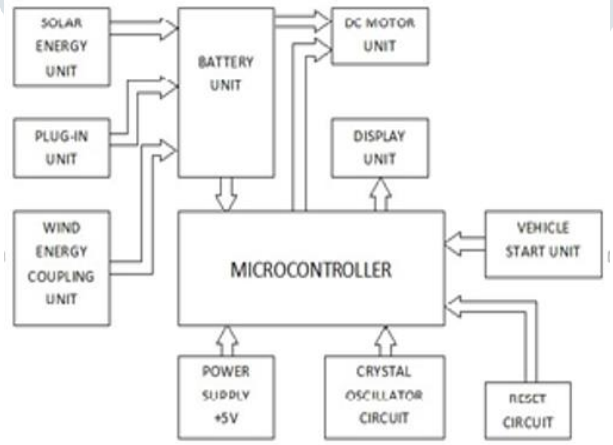

Fig.2: Block Diagram

VI. DESCRIPTION

The block diagram in figure 1 is having multiple sections such as controller unit, battery storage unit, energy generation unit, power supply unit, vehicle control unit (RF) and dc motor unit.
The controller unit consist of a controller IC 89S52, crystal oscillator (12 MHz), charging and discharging section and LCD display. In power supply the voltage is regulated in two different voltage (5V and 12V). Vehicle control unit has RF transmitter and receiver module which control the motion of the vehicle.

VII. WORKING PRINCIPLE

This project works on the mechanism of renewable resources such as sun and wind [2]. Solar energy is established by using solar panel on the roof of the vehicle and wind energy is achieved through the Dynamo (windmill) motor. By these mechanisms, better use of traditional renewable sources is done.

In the presence of sunlight, solar panel gets the energy and is fed to the solar charging circuitry. Similarly, when wind is available, dynamo motor starts rotating which is fed to the wind charging circuitry. These energy sources charge the rechargeable battery and as per the availability of the source it is displayed on the LCD display.

Vehicle wheels are connected to DC motor unit which gets the DC voltage from the rechargeable battery and at that time battery gets discharged and the movement of the vehicle (such as forward, reverse, left and right) is controlled by RF remote. By taking into consideration, when resources are not available at that time the battery is charged using a plug-in source.

VIII. RF TX-RX MODULE

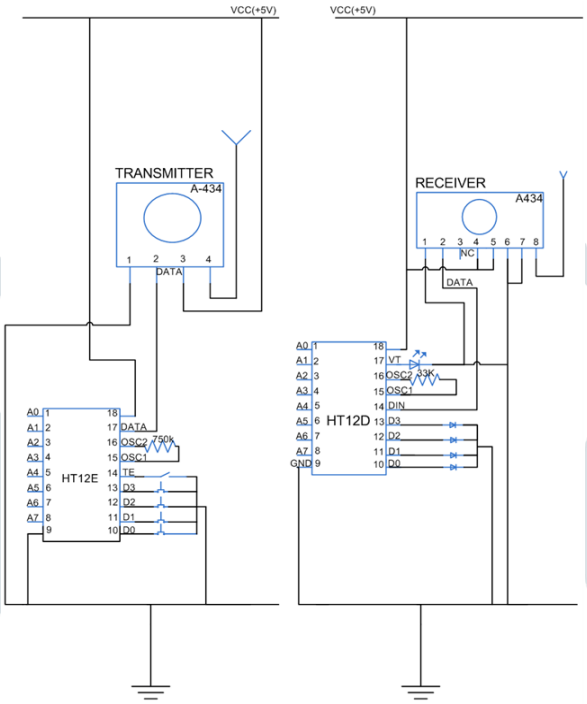

Fig.3: Wireless RF Encoder and Decoder

This circuit utilizes the RF module (Tx/Rx) for making a wireless remote, which could be used to drive an output from a distant place. RF module, as the name suggests, uses radio frequency to send signals. These signals are transmitted at a particular frequency and a baud rate. A receiver can receive these signals only if it is configured for that frequency.

A four-channel encoder/decoder pair has also been used in this system. The input signals, at the transmitter side, are taken through four switches while the outputs are monitored on a set of four LEDs corresponding to each input switch. The outputs from the receiver will drive corresponding relays connected to the motor driver circuit.

IX. FINAL MODEL

The model has a PCB on board which has the controller unit, LCD display, relay (sugar cube), motor driving unit and RF receiver unit. At the backside it has the solar and wind energy generation unit implemented on a general-purpose board. Beneath the vehicle two 500 rpm DC motors are installed for the movement of the vehicle.

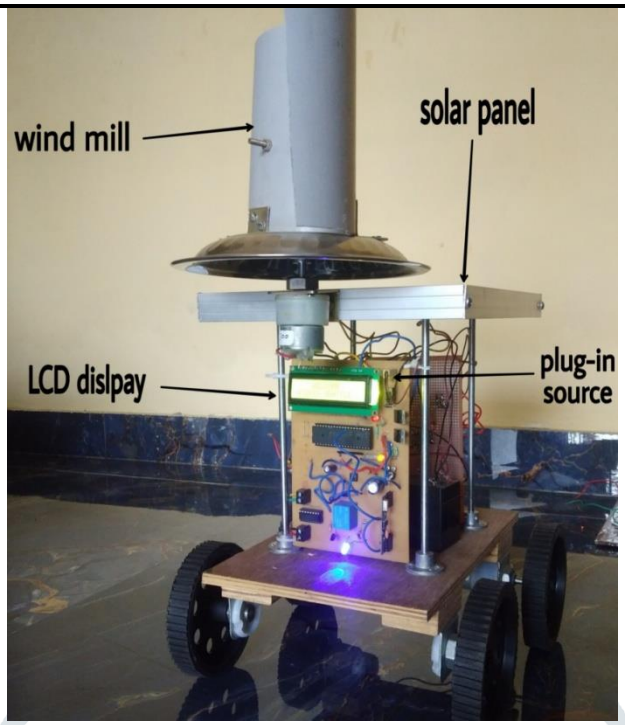

Fig. 4: Model of the project

REFERENCES

[1] B. Spier and G. Gutmann, "42-V battery requirements lead-acid at its limits", J. Power Sources 116, pp. 99-104, 2003.
[2] M. Anderman, "The challenge to fulfill electrical power requirements of advanced vehicles", J. Power Sources 127, pp. 2-7, 2004.
[3] A. W. Stienecker, T. Stuart and C. Ashtiani, "A combined ultracapacitor-lead acid battery storage system for mild hybrid electric vehicles", IEEE VPPC 7-9, 6, 2005.
[4] L. Shuai, K. A. Gorzine and M. Ferdowsi, "A New Battery/Ultracapacitor Energy Storage System Design and Its Motor Drive Integration for Hybrid Electric Vehicles", IEEE Trans. Vehicular Technology, Vol. 56, No. 4, Part 1, pp. 1516-1523, 2007.
[5] S. M. Lukic, J. Cao, R. C. Bansal, F. Rodriguez, and A. Emadi, "Energy storage systems for automotive applications," IEEE Trans. Ind. Electron., vol. 55, no. 6, pp. 2258–2267, Jun. 2008.
[6] M. B. Camara, H. Gualous, F. Gustin, and A. Berthon, "Design and new control of DC/DC converters to share energy between supercapacitors and batteries in hybrid vehicle," IEEE Trans. Veh. Technol., vol. 57, no. 5, pp. 2721–2735, Sep. 2008.
[7] A. Emadi, K. Rajashekara, S. S. Williamson, and S. M. Lukic, "Topological overview of hybrid electric and fuel cell vehicular power system architectures and configurations," IEEETrans. Veh. Technol., vol. 54, no. 3, pp. 763–770, May 2005.
[8] A. Lidozzi and L. Solero, "Power balance control of multiple-input DC-DC power converter for hybrid vehicles," in Proc. IEEE Int. Symp. Ind. Electron., Ajaccio, France, May 2004, pp. 1467–1472.
[9] H. Matsuo, W. Lin, F. Kurokawa, T. Shigemizu, and N. Watanabe, "Characteristics of the multiple-input DC-DC converter," IEEE Trans. Ind. Electron., vol. 51, no. 3, pp. 625–631, Jun. 2004.
[10] K. Dircks, "Recent advances in fuel cells for transportation applications," IRJET