Design and Implementation of Electric Bike with Gear

Amal suresh[1], Geo jose[2], Visakh MS[3], Vipin benny[4], Anoop K J[5],

[1,2,3,4]UG Students, [5]Professor, Department of EEE,

Mar Baselios Christian College of Engineering and Technology, Kuttikkanam, Kerala, India

Abstract – Nowadays, several countries in the world face with the issue of air pollution due to the emission of carbon by the operation of transports and industry. The fossil fuels that are utilized in the urban transport are one of the key intensifying factors. Among the assorted types of the electric vehicles, the two wheels electric vehicle like electric bicycle, bike and scooter can play a crucial role in reducing urban traffic and sound pollution. Regarding to the aforementioned points, several researchers around the world are concerned in the design process of these types of vehicles. As the level of pollution in the world is rising, the adoption of electric vehicles are precisely the best option. Electric vehicles can also reduce the emissions that contribute to climate change, smog, improving public health and reducing ecological damage. The operation of the Electric vehicles on renewable energy such as solar or wind minimizes these emissions even more. This paper focuses on the design of an electric bike with a gear system. Since the gear system is usually preferred by most of the two-wheel drivers, this research focused to the design of a geared electric bike. The design of electric scooter suggested by the investigators has less speed range and no gear. In order to overcome the problems, proposed design is incorporated with a gear system to get a speed range of 0-80 km/h. Aurdino Uno 3 controller is used to control the speed of the bike. This innovative technique will attract consumers which in turn improve the market strategy.

Key words**:** electric bike, BLDC motor, gear system, Li-ion Battery, Uno Controller

I. Introduction

'There are 1.2 billion vehicles are on world's roads now, and it is expected to be 2 billion by 2035 [1]. Almost all the vehicles are depending on petroleum for their transportation. According to a very recent estimate earth's petroleum resources become fully exhausted within 50 years and thereby IC engine driven vehicles will be no longer available [2]. This may result into a revolution of electric vehicle soon. Hence this paper deals with the design and implementation of an electric bike with gear system.

Besides the advantages over fuel, there is no sound pollution and air pollution for electric vehicle [3]. Many R & D studies were done in this specific area and many electric scooters are now on the road [4]. The maximum speed of these vehicles is 40 km/ph and they are driven by DC motors. The energy storage system used is lead acid batteries.

In this proposed work Brush Less DC (BLDC) motor is used to drive the vehicle. Li-ion battery supplies input power to drive the motor. The design includes a four gear system for the transmission. Uno based Aurdino controller system is used for controlling the speed of the motor.

II. Design Methodology

The key factor of the design of the proposed electric bike includes the selection of motor, battery and controller.

(A) BLDC MOTOR

Previously, electrical vehicles were run by using dc series and induction motor and nowadays that are replaced by BLDC motor.

BLDC motor shown in figure 1 is a conventional type of synchronous motor widely used in electric bikes owing to the advantages of high starting torque and longer life. The absences of brushes even increase the efficiency.

Fig.1 BLDC motor

(B) Design equations

Total resistance (T_R) offered by the bike is shown in equation 1.

$$T_R = R_R + A_R + G_R \quad (1)$$

In the above equation (2), R_R is the rolling resistance, A_R is the air resistance and G_R represents the gradient resistance.

Rolling resistance (R_R) can be calculated as per the equation (2).

$$R_R = Fr * mg \quad (2)$$

Fr gives the coefficient of rolling resistance (0.015) and the bike mass is represented by *m* in kilograms. After substituting the value of gravitational force and assuming a mass of 125 *kg* in the equation (2), the rolling resistance gives rise to 18.39 N.

Air resistance (A_R) is obtained from equation (3).

$$A_R = 0.5*C_d*(v/3.6)^2 \quad (3)$$

Assuming the velocity of the bike *v* as 40km/h and drag coefficient C_d as 0.5, Air resistance A_R gives a force of 30.86 N.

Gradient Resistance (G_R) can be calculated as per the equation (4).

$$G_R = w*\sin(angle) \quad (4)$$

The weight of the bike is represented as *w* and assuming the angle in straight road as 2.3 degree, G_R gives a value of 49.21 N. Substituting the above values in equation (1) which leads to T_R as 98.46 N. Hence for running the bike, a BLDC motor is selected for 2 kW, 3000 rpm, 9 Nm.

(c) Battery

A battery is a gadget comprising of at least one electrochemical cells with outer associations gave to control electrical gadgets, for example, spotlights, cell phones, and electric cars. When a battery is providing electric power, its positive terminal is the cathode and its negative terminal is the anode. The terminal checked negative is the wellspring of electrons that will course through an outside electric circuit to the positive terminal. At the point when a battery is associated with an outer electric burden, a redox response changes over high-vitality reactants to bring down vitality items, and the free-vitality contrast is conveyed to the outside circuit as electrical energy. Historically the expression "battery" explicitly alluded to a gadget made out of various cells, anyway the use has developed to incorporate gadgets made out of a solitary cell. In the present design four Li-ion batteries were used each comprising of 12V, 28A.

(D) Controller

A Uno controller is used in the current implementation. The main function of the controller is to control the speed of the motor and control battery charging.

III. System Architecture

The system architecture of the controller is shown in figure 2. The BLDC motor's speed can be effectively controlled by using aurdino uno3. The block diagram of the controller is shown in figure 2. The selected controller can work for a power of 2000W. The rated voltage is 48V for an operating temperature of -20 to 80 degree Celsius. The over and under cut off voltage is 58V and 41V respectively. The throttle voltage required is 1V to 5 V. It can work for a rated current of 70 A with 36 MOSFETs.

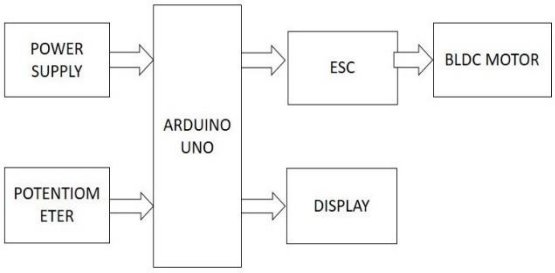

Fig.2 Basic block diagram

The electric bike throttle (accelerator) varies according to the potentiometer and hence this will make a change in the input signal's amplitude between zero to five volt. This input voltage fed to the arduino and that will control the motor current. The system architecture is depicted in figure 3.

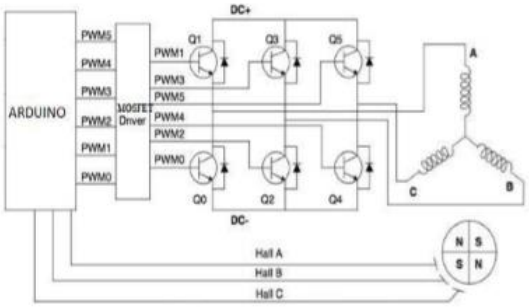

Fig.3 System Architecture

The hollow sensor is an essential part of the BLDC motor. It senses rotor position and pass the signal to arduino. Depending on the sensor input the arduino decides which stator winding is to be energized. The direction is changed by changing winding input. The block diagram of the proposed system is shown in figure 4.

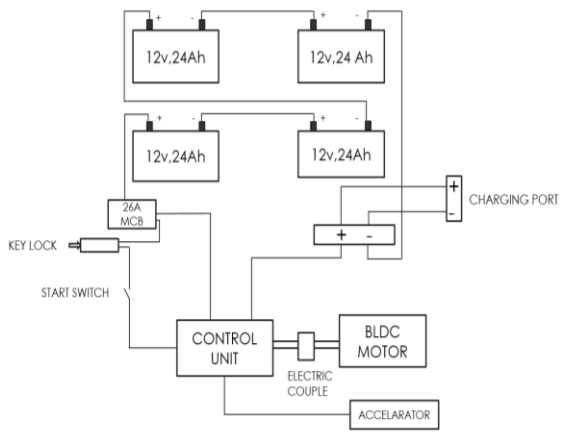

Fig.4 Proposed system

IV. Result and Discussion

According to the above design parameters the electric bike is designed, implemented and tested successfully. A bike with an IC engine is replaced as electric bike. The engine is replaced with BLDC motor and batteries. Gear system is connected to the electric bike system in order to vary the speed for wide range. The battery and motor assembly is implemented and shown in figure 5.

Fig.5. Motor and Battery assembly

The complete assembly of the electric bike successfully tested is shown in figure 6**.**

Fig.6. Electric Bike

V. Conclusion

An electric bike with gear system is designed, implemented and tested successfully. Design of battery and motor is done for the electric bike. It gives good mileage and speed compare to the conventional bike running with IC engine. This also reduce the noise and pollution which will further help to reduce global warming which is the present critical issue the world looking forward to find new solutions. The cost is competent to the IC engine bike and even can be reduced by using other super capacitor batteries. Moreover, the efficiency can still be enhanced with the incorporation of renewable energy sources like wind and solar energy for charging. Furthermore, the regenerative braking technology and fast charging methodology can be implemented in association with electric bike.

Reference

[1] Anurag M. Lulhe, Tanuja N.Oate "A Technology Review Paper for Drives used in Electrical Vehicle (EV) & Hybrid Electrical Vehicles (HEV)". IEEE Conference, 2015.

[2] A. Emadi, Y. J. Lee, K. Rajashekara, "Power electronics and motor drives in electric, hybrid electric, and plug-in hybrid electric vehicles", IEEE Transactions on Industrial Electronics, vol. 55, no. 6, pp. 2237- 2245, June 2008.

[3] Yi Hou, Alexandre Ravey, David Bouquain, Fei Gao, Abdellatif Miraoui, Weiguo Liu "Electric Motor Control for Hybrid Electric Vehicles based on Different Driving Cycles", 2013

[4] Nikhil hatwar, Anurag Bison, Haren Dodke "Design Approach for Electric Bikes Using Battery and Super Capacitor for Performance Improvement", IEEE conference on Intelligent Transportation, 2014.