Investigation of laser parameters in Al sheet

[1*]Gavendra Norkey
[1]School of Mechanical Engineering, Lovely Professional University, Phagwara, Punjab, India.

Abstract: Pulsed Nd:YAG laser is used for the purpose of cutting of 8011 sheet of aluminium. Highly reflective and thermally conductive sheets can be cut suitably with the help of laser. Qualitatively cutting of sheets have to be depended on the properties of the materials like optical and thermal. Due to the highly reflective surface of the work material i.e. aluminium sheet which is not possible to cut preciously with the help of any other machining processes. Wavelength of Nd:YAG laser is having 1.06 µm which is less as compared to CO_2 laser (10.6 µm). Nd:YAG laser is easily absorbed by the highly thermal conductive materials due to its minimum wavelength. Wide uses of the aluminium alloy thermally conductive material in technologically advanced industrial sectors like aerospace and automobile. Complex shapes and stringent design can be cut preciously by proper controlling of the input parameters. For getting the optical setting of process parameters the impact of their variation on various quality attributes of interest is required to be discussed. In this paper the control factors i.e. pulse width, cutting speed, pulse frequency and assist gas pressure on kerf taper (KT) and material removal rate (MRR) have been experimentally investigated. The empirical model for KT and MRR has also been developed.

Keywords: 8011 sheet of aluminium, laser beam cutting, material removal rate,Kerf taper.

1. INTRODUCTION

There are many advanced machining processes are available in market like electric discharge machining (EDM), electro chemical machining (ECM), ultrasonic machining (USM), laser beam machining (LBM) etc. Out of these machining, LBM is widely used in market due to its quality and properties. Laser beam machining can be classified as per the requirements like cutting, drilling, milling, grooving, marking etc. Basically Nd:YAG and CO_2 lasers are widely used in various manufacturing area for the cutting of thin and thermally conductive materials, Nd:YAG laser is most suitable. Because of its wavelength 1.06 µm is easily absorbed by the thermal conductive materials like aluminium and its alloys. Nd:YAG laser machining system is shown in Fig. 1.

Laser beam cutting (LBC) is the type of laser beam machining which is an unconventional machining process. Laser beam has high energy density and when this thermal energy is concentrated on a work material this energy is consumed by surface of the material. By this the workpiece warmth and convert the work volume into molten, vaporised and chemically degenerate form which is commonly eliminate by the use of streaming high pressure assist gas jet (that simulate and reconstruct the material and discharge it from machining area) [1-2].

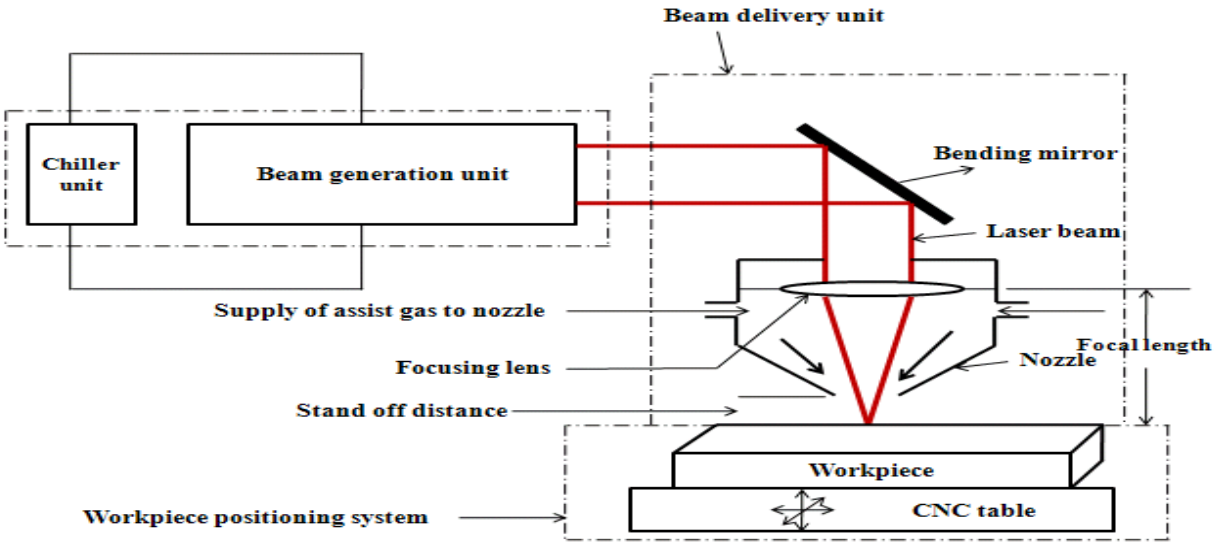

.

Fig.1. Block diagram of Nd:YAG laser beam system

The cutting quality of the used workpiece depends on the properties of the materials i.e. thermal and optical. Heat energy is absorbed by the workpiece by the irradiation process. No tool wear and vibrations are found in this process because of its non-contact type process. Kerf taper always found in the laser cut specimen because of the profile of laser [3].

LBC has widely used in the areas of aviation, automobile, marine, electronic industry and atomic sectors. Pulsed Nd:YAG laser becomes as an outstanding performer on thermally conductive sheets due to its less mean beam power, more laser beam intensity, excellent focusing quality and less heat affected zone (HAZ). For getting the precise results, intricate cut profile, and narrow kerf widths, it has used widely in the present scenario. Due to some very good properties like light weight, rust free and favourable thermal and electrical, aluminium and its alloys makes more famous [4].

Nowadays laser cutting is a leading field for exploration in excellent trait cut. On the workpiece the consistently occurrences of kerf taper (KT)always present in workpiece which is cut by laser as shown in Fig.2 because laser beam having converging-diverging shape of beam. Major challenges in producing better quality cuts in laser cutting are recast layers, adhesion of dross and heat affected zone (HAZ). The involve specification like material content and its thickness and operation mode (pulsed or CW), cutting speed, used gas type and pressure, power of beam, these the characteristics at which cutting phenomena is merely depends. A lot of theoretical and experimental investigations have been done to analyse the impact of control parameters on surface quality and geometry [5-10].

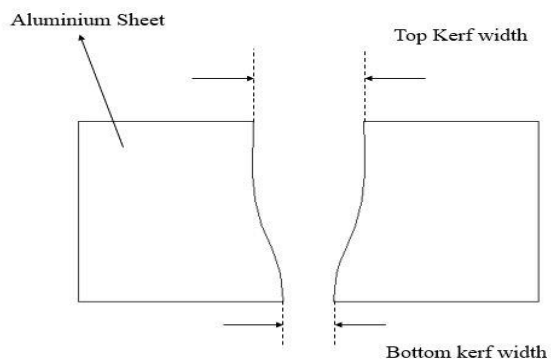

Fig.2. Typical beam profile

It has been shown that it is more used for the preciously cutting purpose of highly thermal conductive and reflective materials like aluminium and its alloys. For accomplishing the better quality cut in these materials the laser cutting control parameters are required to be chosen and optimized[11-15]. For achieving the setting of process parameters the effect of their variation on various output quality characteristics of interest is needed to be investigated. Dahotre *et al.*[14] have investigated three-dimensional laser machining of structural ceramics.

The parameters improvement of the cutting attributes during machining of Al material of up to 0.7 mm thickness for straight profile. They have considered two kerf quality attributes, for example, kerf width and kerf deviation and estimated with optical estimating magnifying instrument. They have been optimized simultaneously the quality characteristics through selected four control parameters like gas pressure, pulse width, pulse frequency, and cutting speed by using Taguchi quality loss function. They used applied Taguchi methodology and L_9 OA for performing the experiments [15-16].

Prashant *et. al.* [17], have been discussed about the experimental study on the laser cutting of nickel based material. They have used kerf deviation as a quality characteristic and four control factors. They have been taken L_{27} orthogonal array. A regression model has been developed by the author and robust parameter methodology has been used for the optimization of the quality characteristic i.e. kerf deviation. They have been observed 50 % improvement in kerf deviation as compared with initial parameter setting.

In this paper the effect of four process parameters viz. pulse width (PW), pulse frequency (PF), cutting speed (CS) and assist gas pressure (GP) have been experimentally analysed during Nd:YAG laser cutting of Al alloy sheet. The quality attributes taken are KT and MRR.

2. EXPERIMENTATION

2.1 Experimental setup

We used pulsed Nd: YAG LBM system of 200 W along CNC work table for our experiments. The O_2 gas is taken for the material removal.

2.2.1 Chemical composition of work material

We used aluminium sheet as work material. The chemical composition of aluminium alloy is shown in Table 1.

Table 1. Composition of8011 aluminium sheet (in %)

Fe	**Cr**	**Zn**	**Cu**	**Mn**	**Mg**	**Si**	**Ti**	**Al**
0.78	0.2	0.19	0.19	0.1	0.09	0.78	0.2	Rest, i.e. 97.47

2.3 Range of variables and preliminary experiments

The specification GP, PW, PF and CS are used as control factor. We have selected values of focal length and standoff distance (SOD). Thickness of workpiece is 0.9 mm in our experiments.

Table 2 Input parameters and their levels

Symbol	Parameters	Unit	Level 1	Level 2	Level 3
A	GP	kg/cm^2	5.0	7.0	9.0
B	PW	ms	0.9	1.1	1.3
C	PF	Hz	16	21	26
D	CS	mm/min	7.0	12.0	17.0

Three levels (Level 1, Level 2 and Level 3) of each input parameters have been selected as mentionedabove. A number of experiments have been performed to determine the range of parameter for the cutting purpose. The experiments are designed as per standard L_9orthogonal array [12] selected for the present problem. The experimental values obtained for KT and MRR are shown in Fig. 3 and Fig. 4.

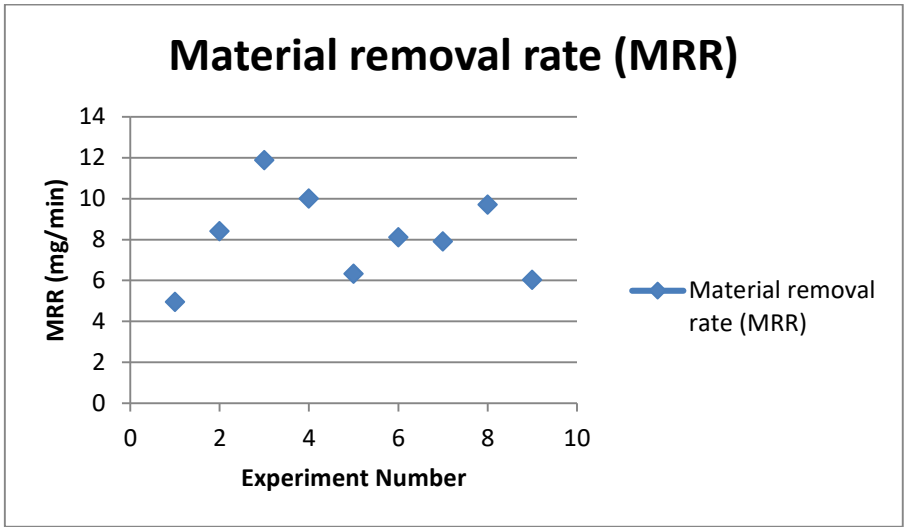

Fig. 3. Variation of MRR with experiment number

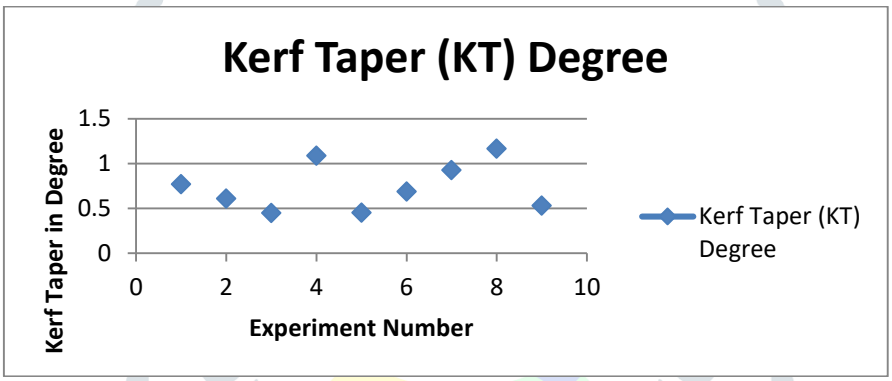

Fig. 4. Variation of KT with experiment number

2.4 Measurement of KT and MRR

KT and MRR are used as quality features. Here quality characteristic analysed is material removal rate (MRR) only. In each experiment the cuts lengths were 10 mm of each two procured. We used Tool Makers Microscope (TM-505, Mitutoyo, Japan) at 10X magnification for the measurement of upper and lower kerf widths. Measurement of KT is shown in Fig. 5. The determination of KT values (in degree) has been done with the help below listed formula Eq 1:

$$KT = \frac{(TKD - BKW) \times 180}{2\pi \times \text{thicness of workpiece}(t)} \quad (1)$$

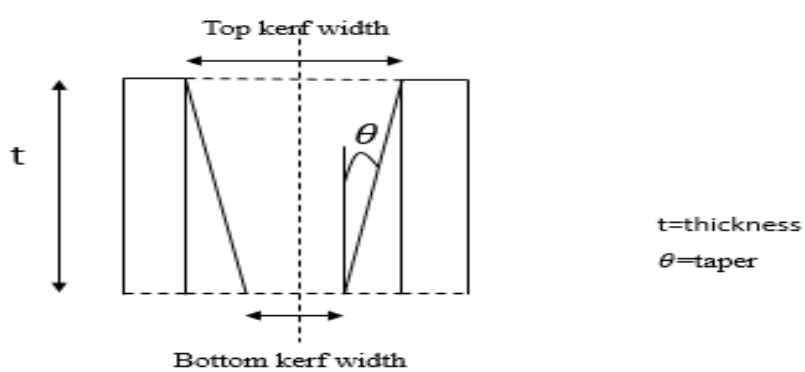

Fig.5. Measurement of kerf taper

For the calculation of KW we have taken moderate value of 3 evaluations for every cut. The Material removal rate (mg/min) is determined by following the Eq. 2:

$$\text{MRR} = \frac{\text{Mass removed in every cut} \times \text{CS}}{\text{Length of cut}} \quad (2)$$

The Material removal rate provides the moderate value two cuts. Mass removed in every cut is calculated by Electronic Balance machine.On the basis of levels, the selection of each input parameter is shown in Table 2. To conclude the specification for cutting managerial pilot experiment has been established. The initial setting of control factors is: GP (A) – 5 Kg/cm^{2,} PW (B) – 0.9ms, PF (C) – 16 Hz, CS (D) – 7.0 mm/min. We used standard L_9 orthogonal array (OA) for our dilemma.

3. EXPERIMENTAL MODELLING

For the appearance of factual link between input and output framework the first order regression model is established. All input process parameter is suspects as measurable and analogous also output parameters assert as below,

$$y = f(x_1, x_2, \ldots, x_p) \quad (3)$$

Where, $x_1, x_2, \ldots, x_p$= input process parameters , y = response

If errors are the negligible the independent variables (input process parameters) are controllable and continuous with experiments, its assumed. For accurate contact between self -reliant variables or feedbackthe relevant approximation is needed. The general form of first order response model is expressed as follows [13]:

$$\left.\begin{aligned} y_i &= b_0 + b_1x_{i1} + b_2x_{i2} + \ldots + b_p\, x_{ip} + e_i \\ &\quad OR \\ y_i &= b_0 + \sum_{j=1}^{p} b_j x_{ij} + e_i, \quad i = 1, 2, \ldots, n \end{aligned}\right\} \quad (4)$$

Here, *e*= random error
p= no. ofself-reliant variable
i =ithoperation performed
n=no. of operation performed
b's = regression coefficients
p+1= total no. of regression coefficients.

Theleast square approach is used for evaluating the regression coefficient.According to least square approach, the total no. of error L can be expressedin below equation [13].

$$L = \sum_{i=1}^{n} e_i^2 = \sum_{i=1}^{n} (y_i - b_0 - \sum_{j=1}^{p} b_j x_{ij})^2 \quad (5)$$

Now, we can find b_0 and b_j for that L is minimum. With the help of partially differentiating *L*w.r.t. b_0 and b_j respectively these can to evaluated and keeping to comparing with zero.

$$\left.\begin{aligned} \partial L / \partial b_0 &= -2\sum_{i=1}^{n}(y_i - b_0 - \sum_{j=1}^{p} b_j x_{ij}) = 0 \\ &\textit{And} \\ \partial L / \partial b_j &= -2\sum_{i=1}^{n}(y_i - b_0 - \sum_{j=1}^{p} b_j x_{ij})\, x_{ij} = 0,\ j = 1, 2, \ldots, p \end{aligned}\right\} \quad (6)$$

Eq. (6) shows a set of (p+1) equations and the values of regression coefficients is computed by solving (p+1) equations.Eq. (7) and (8) show the MRR (mg/min) and KT (degree) model respectively. Experimental results of all nine trials [Fig. 3] are taken for the development of regression model. These regression models of KT and MRR are shown below:

Regression Analysis: MRR versus A, B, C, D

The regression equation is

MRR = - 2.732 - 0.131 A + 2.63 B + 0.112 C + 0.475 D (7)

Regression Analysis: KT versus A, B, C, D

The regression equation is

KT = 1.47 + 0.0664 A - 0.927 B - 0.0264 C + 0.0317 D (8)

Response plot for KT and MRR on the basis of developed models plotted in Fig. 6. In this reduction in PF will reduce the spot overlapping rate causing more tapered kerf. High average laser power due to increased pulse frequency will melt more material causing increased MRR.

Table 6: Factors 3 levels experimental design

Exp. No.	Oxygen pressure (A)	Pulse width (B)	Pulse frequency (C)	Cutting speed (D)	MRR (mg/min)	KT (Degree)
1	5 (1)	0.9 (1)	16 (1)	7.0 (1)	4.95214	0.76935
2	5 (1)	1.1 (2)	21 (2)	12.0 (2)	8.418	0.6103
3	5 (1)	1.3 (3)	26 (3)	17.0 (3)	11.88145	0.4510
4	7 (2)	0.9 (1)	21 (2)	17.0 (3)	10.0024	1.08746
5	7 (2)	1.1 (2)	26 (3)	7.0 (1)	6.3358	0.4514
6	7 (2)	1.3 (3)	16 (1)	12.0 (2)	8.12334	0.6896
7	9 (3)	0.9 (1)	26 (3)	12.0 (2)	7.92136	0.9285
8	9 (3)	1.1 (2)	16 (1)	17.0 (3)	9.7068	1.1665
9	9 (3)	1.3 (3)	21 (2)	7.0 (1)	6.04278	0.5308

Note:

(a) The four factors are : A – (Kg/cm^2), B – (ms), C – (Hz), D – (mm/min)
(b) (1) Level 1 of each factor, (2) Level 2 of each factor, (3) Level 3 of each factor.
(c) MRR which has been calculated from equation 7.
(d) KT which has been calculated from equation 8.

The approximate values of every level are shown in Fig. 6. According to that figure MRR increases if increasing the PF. We find qualitative results very well according to our experimental results as compare to significant test.

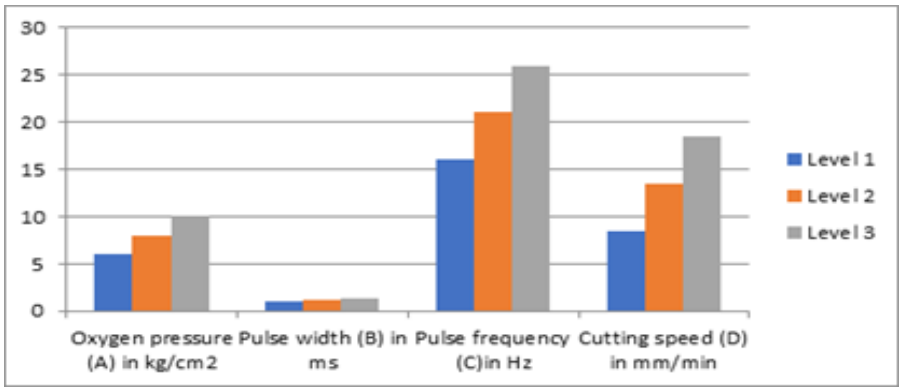

Fig.6: factors on cutting result (MRR)

4. RESULTS AND DISCUSSION

It has been observed that the R^2 for KT and MRR model is 78% and 95% respectively. It has also been found that the values of correlation coefficient for KT are 0.85 which is quietly high and that of MRR is 0.97 which is quite high. Therefore, the values for individual responses are suitable for the generated models. It has been observed from the above developed models that in the current operating conditions KT decreases on increasing the PW or PF while increase on increasing the GP or CS. The MRR increases or increasing the PW, PF or CS and decreases with increasing the GP. The response plot for KT and MRR on the basis of developed models has been shown in Fig. 7-10.

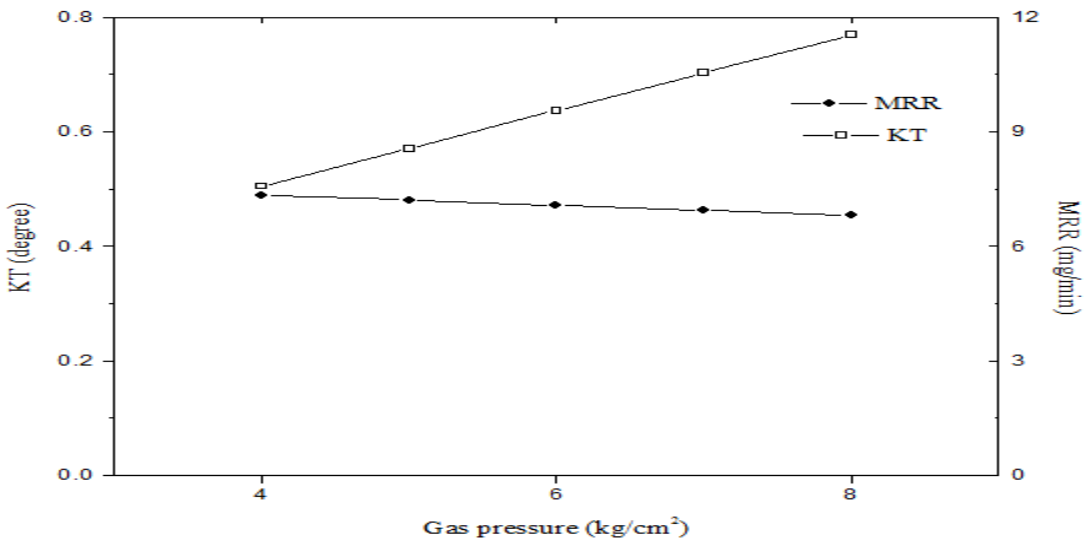

Fig. 7: Effect of gas pressure on KT and MRR.

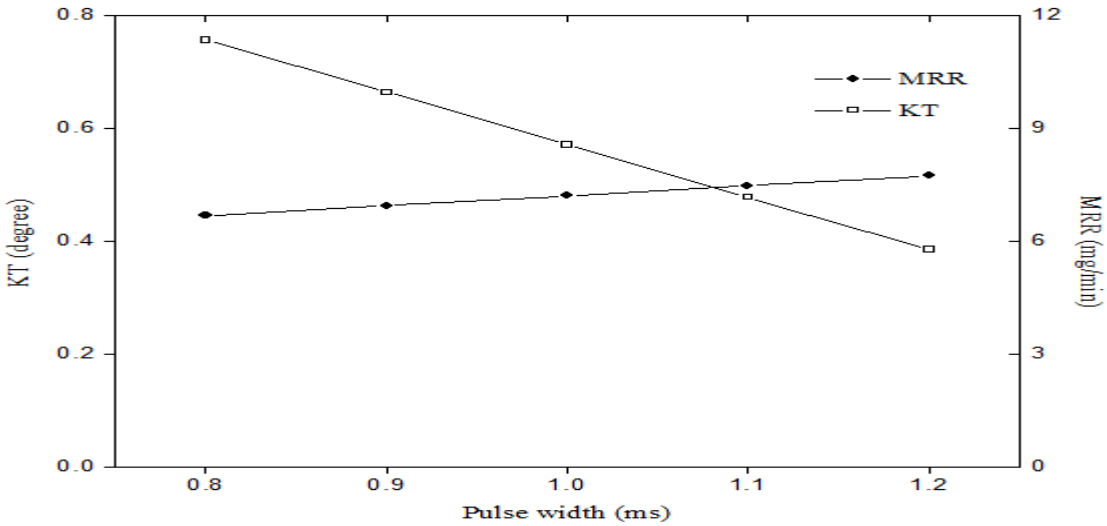

Fig. 8: Effect of Pulse width on KT and MRR.

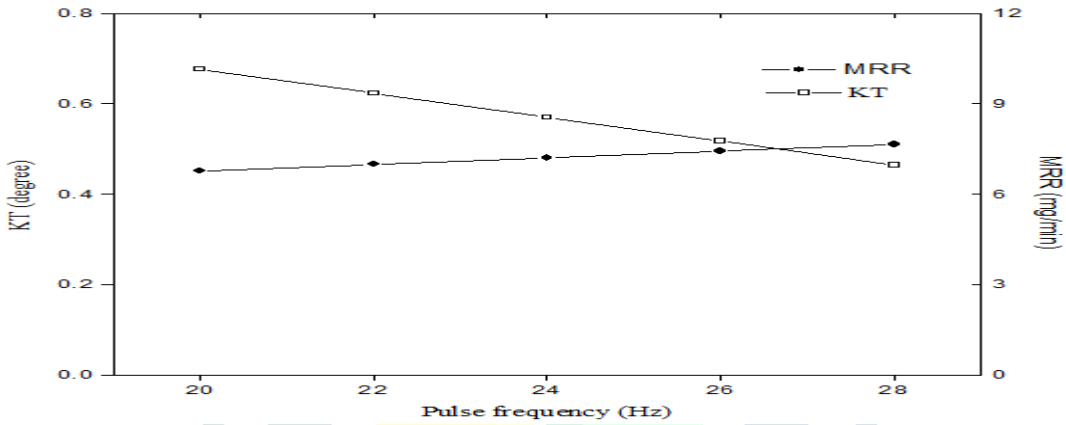

Fig. 9: Effect of Pulse frequency on KT and MRR.

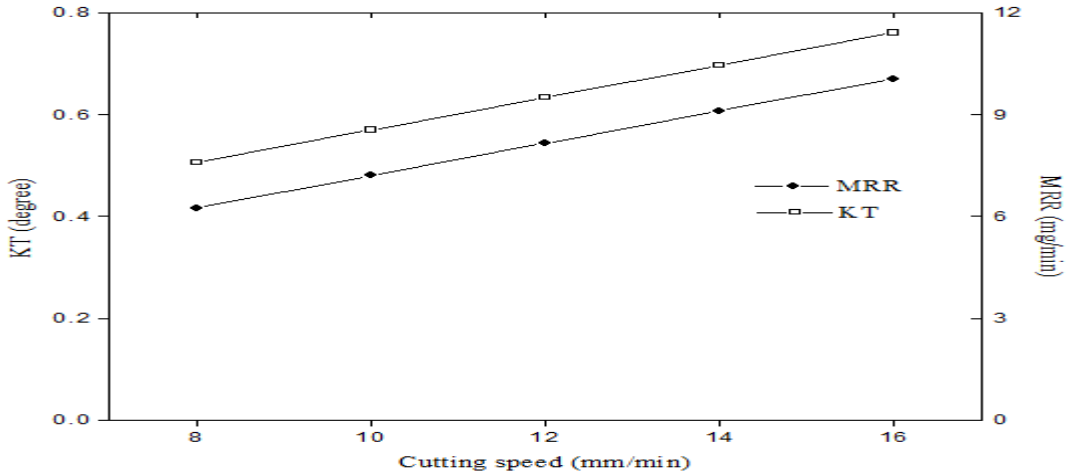

Fig. 10: Effect of Cutting speed on KT and MRR.

It has been observed from the developed empirical models (eq. 7 and 8) that KT increases on decreasing the PW or PF and increasing the GP or CS, whereas MRR increases on increasing the PW, PF or CS and goes down when the gas pressure goes up. It means at decreased PW, high peak power will increase the top kerf width (TKW) but due to less time of interaction the beam of laser will just penetrate through causing minimum bottom kerf width (BKW) that results maximum KT. Decrease the PF or increase the cutting speed will decrease the overlapping rate causing more KT. On higher the GP more energy is removed in the reaction of

exothermic due to more percentage of oxygen and top kerf on the workpiece will become wider. On the other side minimum BKW and more KT due to the lower the intensity of pressure and less exothermic energy. On higher the PW, the contact time between the beam and workpiece will be higher that will cause increase molten aluminium material and hence more metal removal rate. More pulse energy and more cutting speed rate due to higher pulse frequency and cutting speed respectively are mainly responsible for MRR. On higher the GP formation of oxides are higher and adhered to minimum MRR from the bottom side.

REFERENCES

1. Chryssolouris G., 1991, "Laser Machining - Theory and Practice (Mechanical Engineering Series)", Springer, New York.
2. Steen W. M., 1991, "Laser material processing", Springer, New York.
3. Norikazu T., Shigenori Y. and Masao H., 1996, "Present and future of lasers for fine cutting of metal plate", Journal of Materials Processing Technology, 62, pp. 309-314.
4. Dubey A. K. and Yadava V., 2008a, "Laser Beam Machining – A Review", International Journal of Machine Tools and Manufacture, 48, pp. 609-628.
5. Yilbas B. S., Devies R. and Yilbas Z., 1992, "Study into penetration speed during CO_2 laser cutting of Stainless Steel", Optics and Lasers in Engineering, 17, pp. 69-82.
6. Lamikiz A., Lacalle L. N. L., Sanchez J. A., Pozo D., Etayo J. M. and Lopez J. M., 2005, "CO_2 laser cutting of advanced high strength steels (AHSS)", Applied Surface Science, 242, pp. 362-368.
7. Shanjin L. and Yang W., 2006, "An investigation of pulsed laser cutting of titanium alloy sheet", Optics and Lasers in Engineering, 44, pp. 1067-1077.
8. Tani G., Tomesani L. and Campana G., 2003, "Prediction of melt geometry in laser cutting", Applied Surface Science, 208-209, pp. 142-147.
9. Yilbas B. S. and Kar A., 1998., "Thermal and efficiency analysis of CO_2 laser cutting process", Optics and Lasers in Engineering, 29, pp. 17-32.
10. Ghany K. A. and Newishy M., 2005, "Cutting of 1.2 mm thick austenitic stainless-steel sheet using pulsed and CW Nd:YAG laser", Journal of Material Processing Technology, 168, pp. 438-447.
11. Dubey A. K. and Yadava V., 2008b, "Experimental Study of Nd:YAG Laser Beam Machining – An overview", Journal of Materials Processing Technology, 195, pp. 15-26.
12. Phadke M. S., 1989, "Quality Engineering using Robust Design", Prentice-Hall, Englewood Cliffs, NJ.
13. Montgomery D. C., 1997, "Design and analysis of experiments", Fifth edition, John Wiley & Sons, New York.
14. Samant Anoop N., Dahotre Narendra B., Three-dimensional laser machining of structural ceramics, Journal of Manufacturing Processes 12 (2010), 1-7.
15. Rao Raghavendra, Yadava V., Multi-objective optimization of Nd: YAG laser cutting of thin superalloy sheet using grey relational analysis with entropy measurement, Optics and Laser Technology 41 (2009), 922 - 930.
16. Sharma A., Yadava V., Optimization of kerf quality using robust design of experiments during Nd:YAG laser cutting of thin aluminium alloy sheet for straight profile, MIT International Journal of Mechanical Engineering 1 (1) (2011), 1-8.
17. Shrivastava P, Norkey G., Pandey A.K, "Modelling and optimization of kerf deviation in laser cutting of Inconel-718 sheet", Proceedings of 6th international and 27th All India manufacturing technology, design and research conference (AIMTDR), (2016) pp. 515-519.