# Stability Enhancement of Grid Connected Wind Energy Conversion

Ruhul Amin Choudhury[1],Mandeep Singh[2]

[1,2,]Lovely Professional University,Punjab-144401

**Abstract: This paper describes about the wind power and its potential that can be harnessed in the future to meet the current energy demand. With detailed description of the wind turbine and the wind generator, focus has been given on the interconnection of the generators with the grid and the problems associated with it. The use of power electronics in the circuitry and their applications has also been emphasized. The use of soft computing technique enable the way to emphasis the stability of the overall wind energy system. At the end a voltage compensating technique used with respect to various types of fault and their result is being analyzed and how the system is reacting at the time of fault with or without the compensation block.Lastly it is analyzed how fast and dynamically the system is reacting to the fault and attain the stability after fault is being removed.**

**Keyword:** *Renewable Energy,DC-DC Converter,Fuzzy Logic,Capacitor.*

## I Introduction

To generate electricity from wind energy, the wind turbine plays a pivotal role .It is basically a rotating machine which in initial step converts kinetic energy into mechanical energy and then this mechanical energy is transformed into electric energy by other parts of the wind conversion unit. Along with wind turbine there are other parts which in total forms the system and these are Wind generator, power unit, wind energy converter. Wind turbines are basically classified into two types based on their axis of rotation namely horizontal axis turbine and vertical axis turbine. In present scenario mostly horizontal axis is used.

turbine and vertical axis turbine. In present scenario mostly horizontal axis is used[1].

### 1.1 Horizontal Axis Wind Turbines

In Horizontal-axis wind turbines (HAWT) the rotor shaft coupled with blades and along with electric generator are placed at the roof of the axis. A gearbox is also present which makes which drives the electric generator during the slow turns of the blades. In general the turbine is placed pointing in a upwind manner to compensate the turbulence produced by the tower. The tower blades are placed at a suitable distance from the pole or sometimes in a tilted fashion to avoid any conflict with other parts during high wind situation. The blades are also made firm to keep the edges from being pushed due to high winds.

Though there is significant problem of turbulence still downwind machines comes into market and have their own position and significance. During high wind force the blades of the downwind machine actually gets slightly bend to reduce swept area, which in turn reduces wind resistance. The excess amount of turbulence sometimes causes severe damage and leads to system failure.

### 1.1 Vertical axis Wind Turbines

In this type of wind turbines the rotor is not need to placed at the top facing the wind direction rather it is placed horizontally and this makes its construction more stable as it does not need the tower to support the rotor and require less maintenance. This design also brings another advantage as it can easily cope with wind direction that means it can utilize winds from varying directions. The only drawback it suffers from is the generation of pulsating torque.

### 1.2 Power System Stabilization

The Wind system must have the capability to reduce the power system oscillation, which occurs to transient fault. The wind turbine has to diminish the fault before it affects the stabilization of the power system[4].

In this project the following aspects are considered:

- Fast attaining of stability after transient fault
- Generation of controlled active power to suppress the system oscillation
- Optimal control of the relatively slow pitch system
- Reducing the oscillation due to transient by oscillating power extraction
- Analysis of effect of wind turbine control in the overall system stability

The wind turbine are basically classified as variable speed, variable pitch turbine. These are drive with conventional way as it is composed of gearbox and fully scaled synchronous generator. Though in majority situation it is noticed that variable speed drive preferably works with doubly fed induction motor still full scaled synchronous generator are preferred as they gained immense popularity due to its some of its advantages over the former and various researches are also carried out in this field Various control units and methods are proposed and implemented to make this turbines more enable to tackle the transient fault and to prevent the loss of stabilization in the system. Different controlling algorithm is proposed in order to suit various fault issues and is made utilized to handle that fault. A realistic power model is analyzed by simulating different transient faults and also the mutual impacts of both power system and wind turbines are taken into consideration**.**

## 1.3 Grid Connection Requirements

In early energy scenario there is not much hype about wind energy utility or wind energy generation. Therefore there is no requirement of grid connection with the wind turbines. But as the time passage by and more works shifted towards the generation of wind energy and which leads to involvement of grid connection with the wind turbines. During the 1990s, these connection rules are presented and implemented in various countries such as Germany and Denmark. This harmonization is later accepted by national network association and wind energy association for the up liftmen of the wind turbine manufacturers, wind farm owners[6].

### a) Active Power Control:

There is generally two basic reason to control the active power one is to control the increase in frequency during steady condition and the second reason is to attain voltage and frequency stability during transient fault. Though it cannot be distinguished between active power flow during normal condition and transient condition from the analysis of GCR. The analysis of power flow is generally required during the transient fault condition in order to check if the power flow can be reduced when fault occurs so that the wind turbine speed can be prevented from increasing. If the wind turbine is directly connected to the grid connected generator then the

reactive power demand is less and which effectively reduce the power demand after the fault is cleared so that the voltage dips due to fault can be eliminated and the system can regain its voltage stability. Another concern is the rate of increase in power flow when the fault is cleared. This analysis is required in order to prevent power surges to avoid interruption of energy generation. The analysis of power flow is required in all GCR. The consideration of factors for analyzing greatly depends on various factors such as short circuit power. The low short circuit power result in high power flow after the fault is cleared that‟s why the more control of power is necessary in order to keep the system in stable condition.

### b) Frequency Operating Range

The wind turbine must tolerate the frequency deviation. In many grid connected system primary and secondary frequency control are utilized. The main reason of frequency control is required during transient duration as at that time there is much fluctuation in system frequency, which can easily lead to an unstable system. The frequency tolerance of the wind turbine must be high as possible because if the turbine cannot be able to handle the fluctuation then it leads to the discontinue in energy generation but excessive frequency range also effect the working of wind turbine because in some cases it is seen that the speed of the turbines greatly depend on the grid frequency. The operation of variable speed turbines with doubly fed induction generators, is to a large extend independent of the grid frequency, while the operation of variable speed turbines with full-scale converters is fully independent of the grid frequency[11].

### c) Voltage Control and Reactive Power Compensation

In both utility and customer side each equipment posses a specified voltage rating with in which it can operate easily or else it will lead to system or equipment failure. So the control reactive power demand and voltage control must be necessary to keep the voltage within its limit. In some grid connection the wind turbines also contribute in voltage control. In Figure 1 the reactive power demand are compared in terms of power factor. In the figure it is noted that lagging power factor denotes reactive power demand

and the leading power denotes the reactive power absorption.

**d) Transient Fault and Voltage Operating Range Requirements:**

In this section the working voltage is relate with the trip times. The correlation must be considered in order to synchronize the wind turbine with the grid.The co relation between active and reactive power is not taken

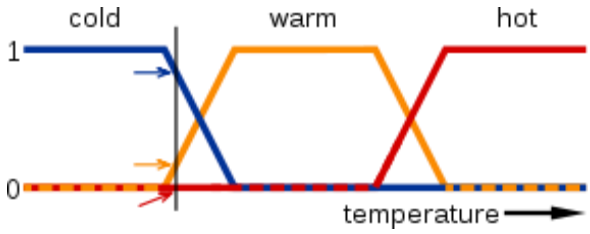


into consideration. Along with voltage operating limits the transient fault ride through is also mentioned. During the voltage the export of current increases in order to compensate power flow as before when the fault does not occur. This implies that the whole wind farm must be designed for currents larger than rated current.

## II. Proposed Work

The aim of the research work is to improve the current and voltage profile and by the use of the reactive power efficiently which will finally optimize the output of the system. But before this a lot of problem occurs like harmonic distortion and this will also improve by the combination of the FUZZY+PI.

As the consumption of the power is increased we have to find the next source, which serves afterwards, and as we know decaying of the fossil fuel increasing the stress of the person that what would be the next source of the power supply. So wind power could be the new source after finishing of the fossil fuel. So merging of the different types of plant taken place with each other by which the efficiency increase. But in the merging of the plants a lot of problems occur and synchronization is really hard which is due to alternator and turbine.

### 2.1 Facts Devices

Definition of FACTS from records consistent with IEEE, has the abbreviation of flexible AC Transmission structures, is described as follows: „"Alternating current transmission systems incorporating power electronics based and other static controllers to enhance controllability and power transfer capability" "The increase in effectiveness in electrical network largely effect by the increase in improvement in semiconductor device and the use of various static converter. This advancement in semiconductor devices also affects the controllability, transferability to a greater extent. Recent development of energy electronics introduces the usage of record controllers in power system. The FACTS devices also give an idea regarding the various cost in reactive power sources to compensate the lagging effect. The main disadvantage of FACTS devices is expensive. The FACTS devices provide smooth and faster response. In general it is based on thyristor or gate turn off thyristor .

a. Fuzzy Logic

It consists of different type of logics and the table made from the logics like 0 and 1. Fuzzy logic consist different logic, which could be partially false or partially true. Additionally bilingual or multilingual variable are used then it can be cosmos different

Figure 1: Fuzzy Logic

function. We regularly used in daily bases in our home and locals.

b. Super Capacitor/Ultra Capacitor.

An ultra-capacitor is different from the conventional capacitor in different ways: The area of the plates is quite larger and the gap between the plate is also large as compared to the normal capacitor. The number of plates is of same magnitude as of the normal capacitor. The manufacturing material of ultra-capacitor is charcoal, which enhances the effective area of the plates, and upon the plates the quantity of the charge is much more in the ultra-capacitor. The dielectric material made from thick sheet of mica does the separation of plates. When these capacitor is charged then at that time the plates carries positive and negative charge produce an electric field which stores energy.

## III. Implemented Methodology

Due to accessibility wind energy becomes most prominent source of energy generation. So in order to overcome various barriers during integration of wind with grid and make the system stable a simple static pulse technique is used. As there is many non-linear factor present in the wind system so most of the control logic find it difficult to adjust and solve the stability issue.So.in this case fuzzy fits better as this logic depends on both crisp and average values. Earlier this logic has not been used much in wind turbine control. One of the prominent reasons is that the control unit of wind turbine depends on small signal analysis and which can easily handled by the PI and PID controller. But as discussed above we are focusing on the large voltage sag due to fault and this

analysis possess lots of non linearity‟s which can easily handled by the fuzzy controller because in a system if the problem cannot be presented in mathematical form and possess non linearity‟s, such problems can be resolved using fuzzy logic. On the other hand the conventional controllers, like PI and PID controllers, require a mathematical description of the system to be controlled, for their parameters to be tuned. For the design of a fuzzy logic controller, such a description is not necessary; as it is fully based on system behavior. This knowledge is presented in form of series rules, which are utilized to attain the system output from system input. The process of designing a fuzzy logic controller consists of the following steps: (i) determining the inputs and designing the fuzzy sets for these inputs, (ii) setting up the rules, and (iii) designing a method to convert the fuzzy result of the rules into a crisp output signal, known as Defuzzification. The derivatives are being generated from the set of rules which are generally grid freq and voltage. These rules are accounted as a set of crisp values and their importance can be presented as membership function. Rules indicates what pitching actions should be taken, based on all conceivable combinations of memberships. In the Defuzzification a crisp pitch angle set point is derived from the results of the different rules. Figure 2 shows how the fuzzy logic pitch angle controller is incorporated with the wind turbine model. The pitch angle set point, $\theta$, is input to the pitch system of the wind turbine, and controls the electric power, which is injected into the power system.

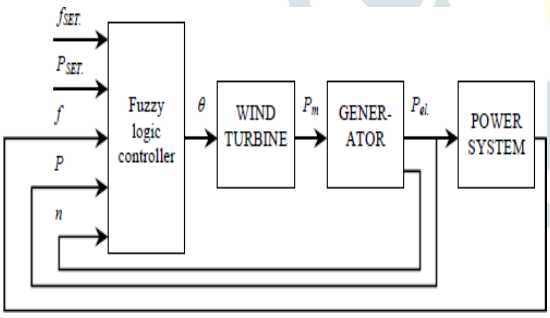


Figure 2:Wind TurbinE Control Circuit with Fuzzy Logic Controller

a. Implemented Fuzzy Rule

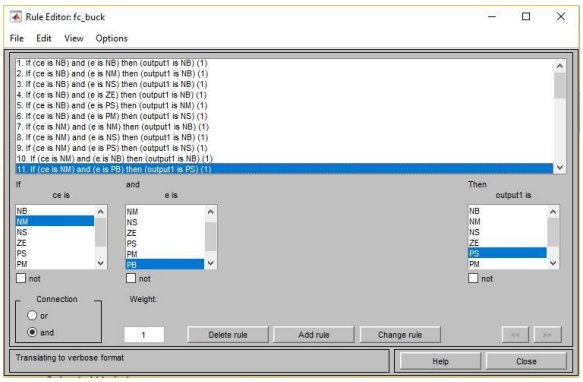


Figure 3 :Snapshot of Fuzzy Rule Implemented

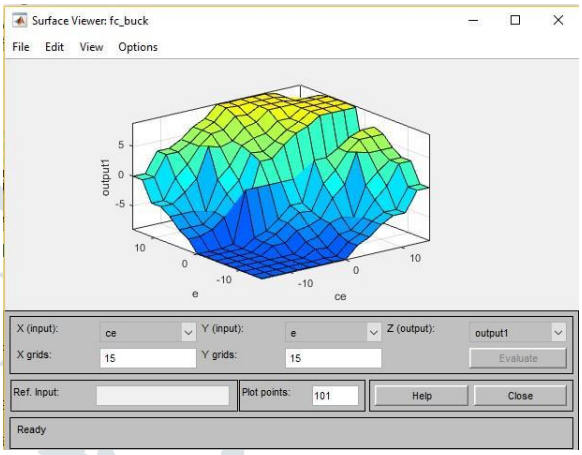


Figure 4 :3D view of Fuzzy Output for Case 1

.

Figure 5: Fuzzy output 1 for ce =9.79 and e=6.52

.

## IV. Simulation Result

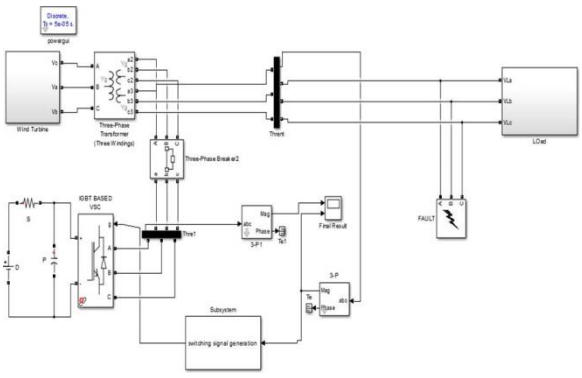

Figure 6 : Block Diagram of Proposed System

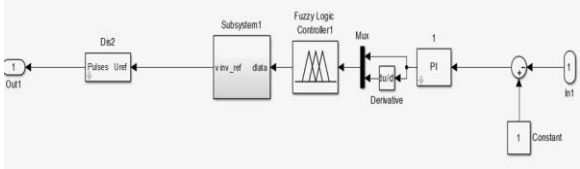


Figure 7 Fuzzy Plus Proportional Integral Part

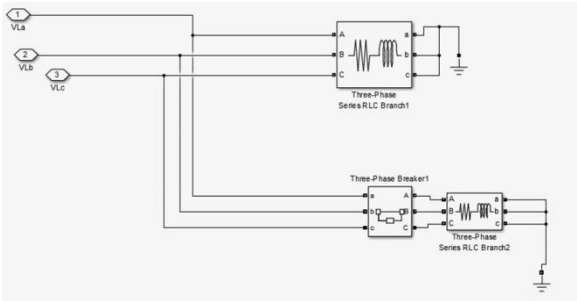


Figure 8 Subsystem Load of a System

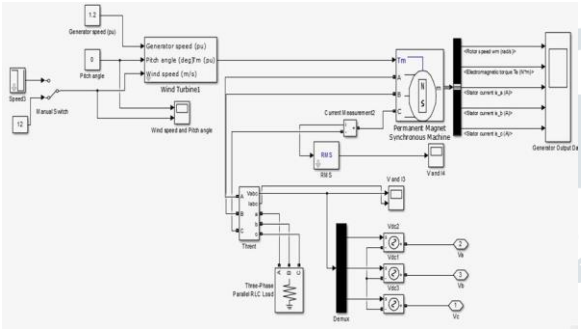


Figure 9 :Wind System

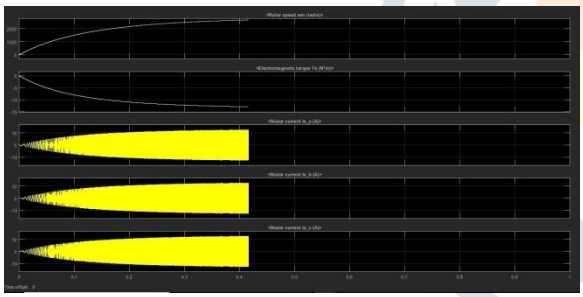

Figure 10 :Generator Output

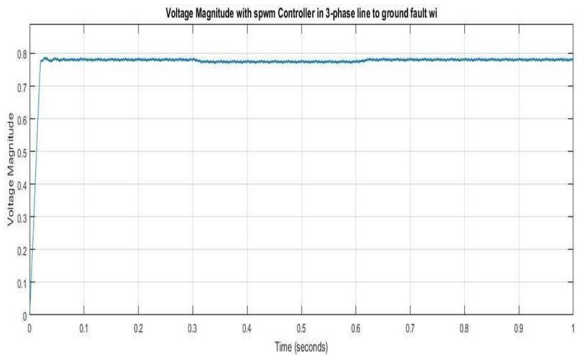


Figure 10 :Voltage Magnitude with SPWM controller in 3 phase Line to Ground Fault

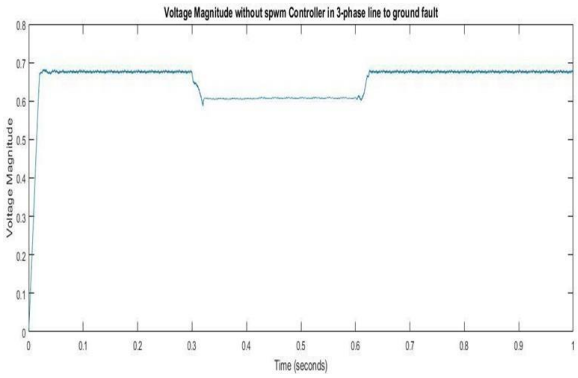


Figure 11 :Voltage Magnitude without SPWM Controller in 3 phase Line to Ground Fault

## V. Conclusion

With pace of time tremendous technology came into existence. Researcher always try to develop latest technology which will be beneficial for society having low cost, maximum efficiency and easy to understand. In our dissertation work fuzzy logic technique used with PI controller in a STATCOM to enhance stability of a grid connected wind farm. The supervisor varies the gain of the PI controller during the transient period in a way that improves the system performance. The system has been modeled and simulated in the MATLAB 2016a technical environment with a case study. In our research work different cases have been study for example with controller and without controller, with SPWM and without SPWM and various fault cases.

Simulation results show that there are some sections, which are improved as compared with base paper. First of all there is enhancement in power quality and which is very crucial factor. Besides this there are some crucial factors, which are enhanced in our research work like reactive power compensation (snag and swelling) executed very efficiently and maintain the voltage profile

:

## References

[1] Mauboy T N, "Integrating wind power: Transmission and operational impacts", Refocus, Vol. 5, pp. 36-37, Nov, 2015.

[2] Islam Manirule, “Transient Stability Enhancement of the Power System with Wind Generation”, [J].TELKOMNIKA 9(2): 267-278, NOV 2015..

[3] Pushbha. “Improving stability of multi-machine wind turbine generators connected to the grid”, Journal of

Engineering for Thermal Energy and Power, 26(2):241-245, oct 2015..

[4] Tang Yufi, "Power System Stability and Control", Mc-Graw Hill, Jan 2015.

[5] Nayna KS, "Thyristor-Based FACTS Controllers for electrical Transmission Systems" Wiley-IEEE Press, NewYork, USA, OCT 2014.

[6] Quasey Saleem, "Improvement of voltage stability in wind farm connection to distribution network using FACTs devices,"in Proc. 32nd Annual Conference on IEEE Industrial Electronics, Paris, Nov. 6-10, 2006, pp. 4242-4247 JAN 2014.

[7] Jeevajothi R, "Transient stability augmentation of power system including wind farms by using ECS," IEEE Transactions on Power Systems, pp. 1179-1187, APR 2012.

[8] ABB Report, "Power quality assessment of wind turbines by matlab/simulink," in Proc. Asia-Pacific Power and Energy Engineering Conference (APPEEC), Chengdu, Mar., 20102.

[9] Kerane, "A comprehensive comparative analysis between STATCOM and SVC, in Proc. International Conference on Applied Robotics for the Power Industry, 2011, pp. 208-210.

[10] Abdelhalim H M"Representing wind turbine electrical generating systems in fundamental frequency simulations,"IEEE Transactions on Energy Conversion, vol. 18, no. 4, pp. 516-524, SEP 2010..

[11] 20% Wind Energy by 2030 –Increasing Wind Energy"s Contribution to U.S. Electricity Supply," U.S. Department of Energy May 2008. DOE/GO-102008-2567.

[12] Madhavan, "Power System Dynamics and Stability," ISBN 1- 58874-673-9, Stipes Publishing L.L.C, Champaign, IL, 2010.

[13] Aamczyk Impact of Wind Power Plants on Voltage and Transient Stability of Power Systems,"IEEE Energy 2010, Atlanta, Georgia, USA,2008..

[14] Sharad and Mohan 2010, "Effects of large scale wind generation on transient stability of the New Zealand power system," IEEE Power and Energy Society, General Meeting, 2008..

[15] M Anju and R Rajasekaran, 2013, "Co-Ordination Of SMES With STATCOM For Mitigating SSR And Damping Power System Oscillations In A Series Compensated Wind Power System", IEEE 2013 International Conference on Computer Communication and Informatics (ICCCI -2013).

[16] Arsoy A. B., Liu Y., Rebeiro P. F. and Wang F.: STATCOM-SMES. In: Industry Applications Magazine, IEEE, IX, Issue 2, 2003, p. 21-28.

[17] E. Vittal, M. O"Malley, and A. Keane, Rotor angle stability with high penetrations of wind generation, IEEE Trans. Power Syst., vol. 27, no. 1, pp. 353–362, 2012..

[18] G. D. Marzio, O. B. Fosso, K. Uhlen, and M. Þ. Pàlsson, Large-Scale Wind Power Integration, Voltage Stability Limits And Modal Analysis, 15th PSCC, Liege, 2005

[19] A. Grauers, Efficiency of three wind energy generator system, IEEE Trans. Energy Convers., vol. 11, no. 3, pp. 650–657, 1996.

[20] Qusay. Salem, "Overall Control Strategy of Grid Connected to Wind Farm Using FACTS", Bonfring International Journal of Power Systems and Integrated Circuits, Vol. 4, No. 1, February 2014.

[21] T. Sun, Z. Chen, F. Blaabjerg, "Voltage recovery of grid-connected wind turbines with DFIG after a short circuit fault," 2004 IEEE 35th Annual Power Electronics Specialists Conference, vol. 3, pp. 1991-97, 20-25 June 2004.

[22] M. Molinas, S. Vazquez, T. Takaku, J.M. Carrasco, R. Shimada, T. Undeland, "Improvement of transient stability margin in power systems with integrated wind generation using a STATCOM: An experimental verification", International Conference on Future Power Systems, 16-18 Nov. 2005.

[23] S.M. Muyeen, M.A. Mannan, M.H. Ali, R. Takahashi, T. Murata, J. Tamura, "Stabilization of Grid Connected Wind Generator by STATCOM", IEEE Power Electronics and Drives Systems, Vol. 2, 28-01 Nov. 2005.

[24] MohamadAmiri, and Mina Sheikholeslami, "Transient Stability Improvement of GridConnected Wind Generator using SVC and STATCOM", International conference on Innovative Engineering Technologies (ICIET"2014) Dec. 28-29, 2014 Bangkok (Thailand).

[25] Milap Shah, PrabodhKhampariya, Bhavik Shah , "Application of STATCOM and SVC for Stability Enhancement of FSIG based Grid Connected Wind Farm", International Journal of Emerging Technology and Advanced Engineering, Volume 5, Issue 7, July 2015.

[26] SercanTeleke, TarikAbdulahovic, TorbjörnThiringer, and Jan Svensson, "Dynamic Performance Comparisonof Synchronous Condenserand SVC",IEEE Transactions on Power Delivery, Vol. 23, No. 3, July 2008.

[27] W. Qiao, G. K. Venayagamoorthy, and R. G. Harley, ―Real-time implementation of a STATCOM on a wind farm equipped with doubly fed induction generators,‖ IEEE Trans. Ind.Appl., Jan./Feb. 2009.

[28] K. Morrow, D. Karner, and J. Francfort, ―Plug-in hybrid electric vehicle charging infrastructure review,‖ Final Rep., Battelle Energy Alliance, Contract 58517, Nov. 2008.

[29] S. N. Deepa& J. Rizwana, "Multi-Machine Stability of a Wind Farm Embedded Power System using FACTS Controllers", India InternationalJournal of Engineering and Technology (IJET), Vol 5 No 5 Oct-Nov 2013, ISSN: 0975-4024.