Utilization of Green Energy for Cooking: A Comprehensive Review

Beemkumar N,
Department of Mechanical Engineering, Faculty of Engineering and Technology,
Jain (Deemed-to-be University), Bengaluru, India
Email Id: n.beemkumar@jainuniversity.ac.in

ABSTRACT: ***A green solution to energy used in periods of power scarcities and global heating is often the alternative power source. Usage of solar power to cook is better, but still not user-friendly and cost-efficient solution. Food is the human being's fundamental need. Stone, cattle dungs, propane, Liquefied petroleum gas (LPG), and energy can all be used to prepare the food. Cooking with a solar cooker is an environmentally safe choice. Several solar cookers were designed and developed by research scientists all over the earth, but their use still is insufficient. The inadequate use of solar cookers is induced in many ways, such as their bulky size, heavy weight, lack of an open location, slow cooking, a set cooking time, less consciousness etc. This article addresses in depth various solar cookers, such as solar panels cookers, solar parabolic cookers, solar boxes form cookers, modified cookers etc. There are also many improvements needed to make the cooker simple to use, light in mass, reduced in dimensions and still inexpensive. In terms of solar cookers, the expansion of a photo voltaic and Heat solar modified cookers has begun a novel perspective as cooking is faster in this process than traditional solar box types and can be used conveniently by consumers. By some minor changes, a solar cooker can turn into a solar dryer and use to dry vegetables. Many scopes for research into solar cookers are still available, particularly for domestic cookers of small sizes.***

KEYWORDS: ***Energy, Exergy, Hybrid Cooker, Solar Cooker, Solar Cooking.***

INTRODUCTION

Amongst the most important applications for solar power is solar cooker. Cooking energy accounts for nearly 36% of the world's main energy. So, in the domestic market, solar cooker possesses great potential. The number of researches on solar cooker performed among 1990 and 2016 can be seen in the Figure 1. The output of power cooker studies has increased dramatically over the years, especially during the last 4 years. This clarifies the importance of solar cookers as a solar energy device, as well as their potential to be a known concentration in the near future. Current work is about reviewing the solar cooker technology. The key guidelines for the performances of a solar cookers are the theory, classification, and parameter. Energy analysis and exergy analysis are also shown. In addition, the necessary part of solar cookers for field and numerous situations in the third world countries is also highlighted in terms of environmental and financial concerns.

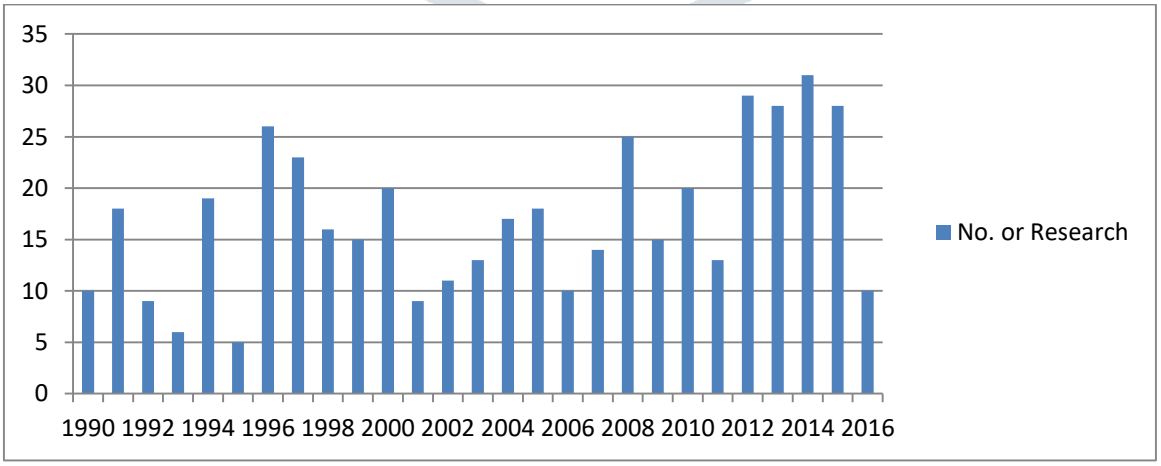

Figure 1: Illustrates number of researches have done on solar cooker since 1990 to 2016[1].

A solar cooker is cooking equipment utilizing sunlight. Solar cooker also permit for nearly significant procedures like pasteurization and purification. It is obvious that in the world, there are countless solar cookers and researchers and manufacturers are continuously developing them. Classifying solar cookers is

also a hard task. It can however be argued that the majority of solar cooker today are labeled as solar panels, solar box and parabolic solar cooker as demonstrated in Figure 2.

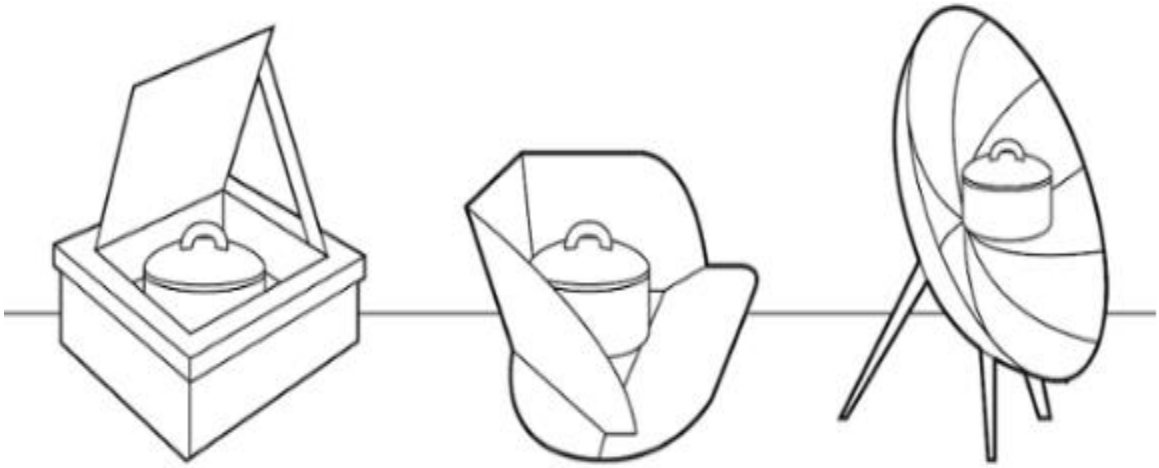

(a) (b) (c)

Figure 2: Demonstrates diverse kinds of solar cooker, i.e. (a) solar box cookers, (b) solar panels cookers, (c) solar parabolic cookers [one earth designs].

1. *Solar cooker reflector type:*

Solar cooker might be regarded as the utmost communal kind because of the affluence of building and little-price materials. The sun is concentrated from above in solar panel cookers. This solar cooking method is not very looked-for because it has inadequate cooking capacity. On the other side, people living or travelling alone enjoy this kind of solar cooker.

Solar panel cookers use reflection equipment to direct sunlight to a cooker containing a transparent plastic bag. Dr. Roger Bernard's solar panel cook is amongst the most popular designs in this genre (CooKit). To manufacture the CooKit, only cardboard and foil were used. The solar cookers are capable, convenient and efficient, enabling nutrients to be preserved without being burnt or dried. Bernard also explored how people use solar cooking technology. The presentation of solar cooker depends heavily on imitated radiation, so under cloudy conditions they do not seem successful[2].

The sun basket is also known as a basic concentrated solar cooker. The sun basket is essentially a paper mache parabolic mirror, strengthened by a yacht fabric layer and fitted with a bamboo frame. The lining of the reflector is an aluminum foil glued to a basket's inner portion. This is often referred to as a passive cooker. A cement concrete of the parabolic type is rendered on the ground for the manufacture of the sun basket. This is accomplished with the aid of a previously manufactured parabolic wood frame which rotates while it is still soft during the masonry. A bamboo basket is made to fit exactly over the parboiled mound shape. The mould is also made of 5 kilograms of shredded waste papers, 2 kilograms of wheat flour, 1 kilogram of fenugreek flour and enough water to produce a thick pulp. The ingredients are well blended and almost boiling. The mould is then sealed by a sheet of water-coated newspapers to prevent the paper mache from adhere to the mould. The paper mache is layered on the paper covered mould in a thickness of approximately 1.2 cm and pressed well. The bamboo basket is then positioned on the damp surface and pressed well and then the paper mache is removed. The silver foil is then pasted on the paper mache for solar rays. The basket requires nine sheets (40×60 cm.) of silver paper.

2. *Box type solar cooker:*

Solar cooking history started with development of solar boxes forms. A French-Swiss naturalist called Horace de Saussure invented the first solar box cooker in 1767. This type of solar cooker showed significant development with regard to design and performance parameters, particularly during the twentieth century. A solar box cooker is made up of a clear glass shell, an enclosed box, as well as glass panels that enable

light to pass through. In order to optimize sun light engagement, the inner portion of the box is paints black. The box comprises a maximum of four cooking vessels[3]. Figure 3 depicts a detailed description of solar box cookers. Each component of the box cooker has a significant impact on the amount of food that can be cooked. Optimizing these parameters is therefore necessary to achieve maximum efficiency.

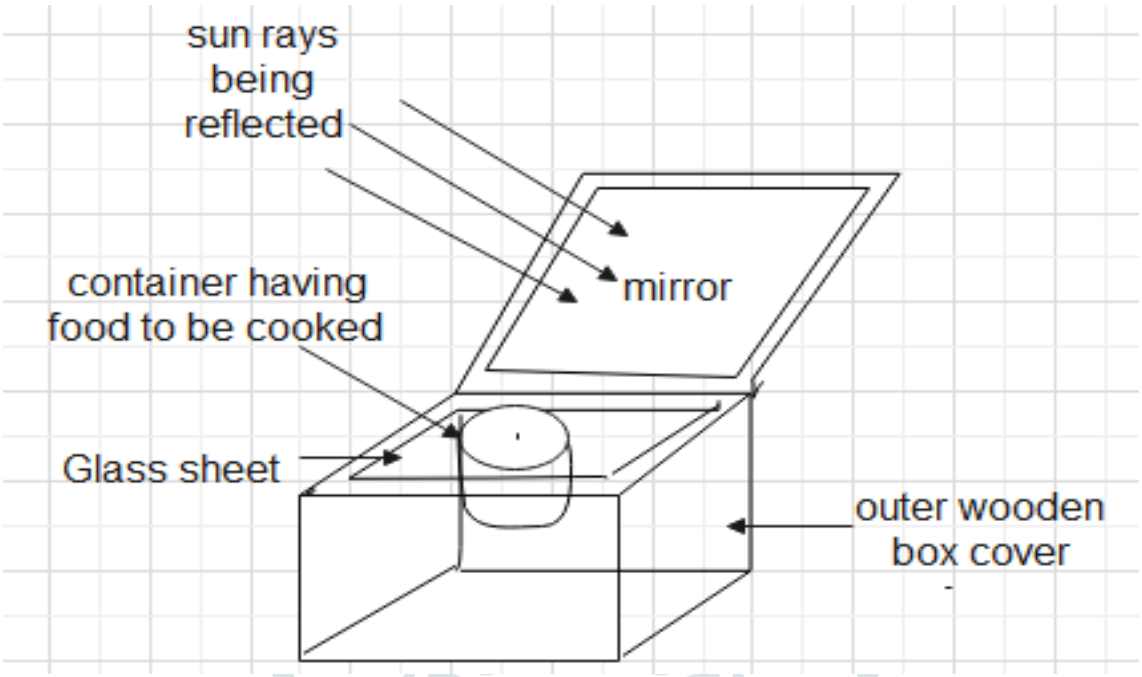

Figure 3: Illustrate box type solar cooker, with all the equipment from mirror to glass sheet to outer wooden box cover [Vedantu].

3. *Booster Mirrors Cooker:*

Since 1980s, investigators engrossed particularly on optimizing solar box cookers' geometry parameters as they dominated efficiency. Few studies examined into the effect of the jumper reflection on the performance of various solar box forms in this sense. Dang analyzed flat plate collector concentrations and clarified that supporter glasses could be used to improve performance of the solar collector as it delivers additional solar radiations. The findings have shown that concentrator are very powerful based on the mirror angle[4]. A full study of a structure comprising a flat dish compiler with 2 glasses was planned by Garg and Hrishiksan. They suggested a model that had 3 diverse Indian station numerically simulated for three different months. In altogether 3 positions, for inclined and horizontal shells the improvements were found to be maximal for the month of December[5]. Narasimha et al. widely studied the solar cooker supplemented with promoter glasses. The solar box cookers were providing with a solitary adjustable boosters mirror calculating the total energy that fell in the cooking opening for the latitude of 18 N (Warangal City, India) and for dissimilar sun declines. With increased latitude, the energy contribution of the booster mirror increases significantly[6].

4. *Uses of phase changing materials (PCM):*

Buddhi et al. contrived then examined a solar cooker by 3 reverberators and a physical storing device for phase shift. The assessment outcomes presented that proposed solar cooker would heat in the late-night [7]. An analysis of the impact of cooker orientation on its efficiency was carried out by Algifri and Al-Towaie[8].

5. *TIM (Transparent insulation material) applications:*

Isolation of the solar box cooker must not be confined to the parapets of a border container and an absorbent tray, as the glazing induces substantial heat loss. Nahar et al. have conducted several studies on the use of TIM in solar cooker in this context. A solar burning-box cooker with a glazing surface made up of TIM 40 and 100 mm thick was established under an interior solar simulant. The temperature of stagnation with the 40 mm TIM was 158°C, compared to 117°C deprived of TIM. A TIM-equipped dual projector heater vent solar cook were designed, installed, and checked, then contrasted to a sole reflector heater vent cooker. [9].

6. *Various designs of solar systems for cooking:*

The Fresnel-type domestic cooker SPRERI was created by Sonune and Philip. The cooker has been found to be able to prepare food for a family of four or five individuals. In approximately 40 minutes, the lowest plate was estimated to be 255ºC, the ambient temperature was 30ºC and the direct sun energy was 859 W/m^2[10]. As shown in Figure 4, Prasanna and Umanand devised a prototype cooker that brought energy from the sun into the cooking. In kitchens, the thermal energy supply had been used to substitute Liquefied Petroleum Gas (LPG). [11].

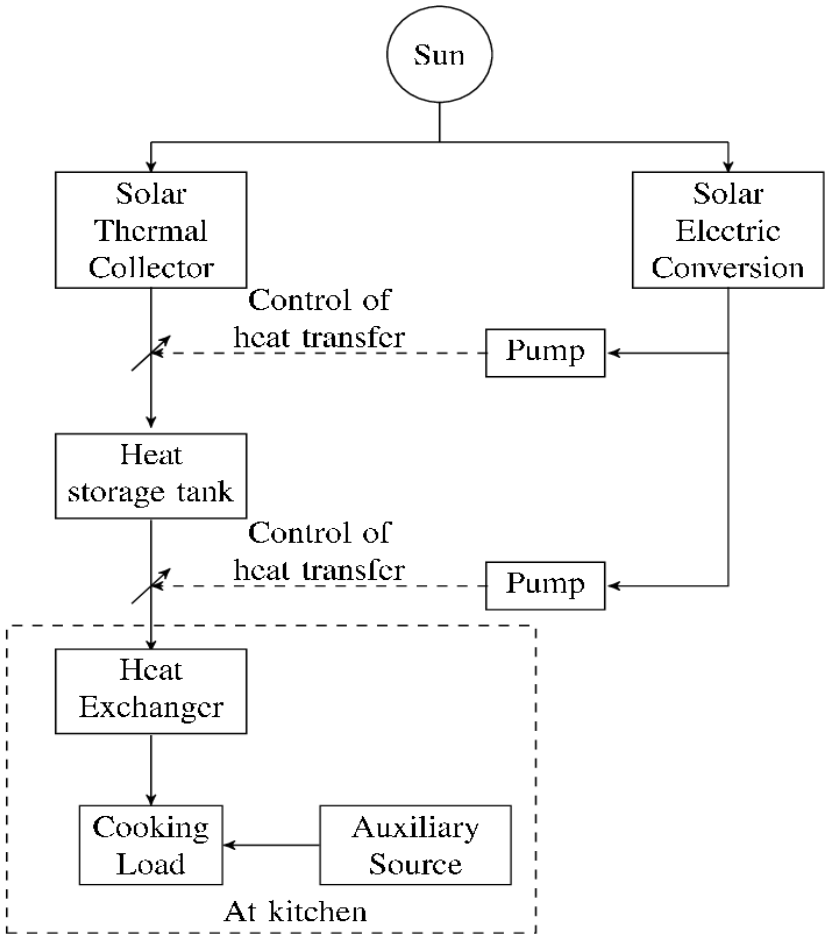

Figure 4: Illustrates solar energy collector, storage and transfer model created by scientists Prasanna and Umanand[11].

The literature shows clearly that solar cookers will be extremely promising in the future. But the solar cookery expertise has some drawbacks. Possibly the furthermost difficult opinion of solar stoves is that when the sun is setting, they can't serve. Some researchers have been working intensively in solar box cookers to enable cooking late in the evening. In certain cases, phase changing materials (PCM) have been used as a remedy. Bushnell develops, installs, and tests a solar energy heating system as a first phase towards that solar cook design. The methods used to describe system efficiency were clarified and pragmatic to a testing organization that contains manageable solar power replacement. This is accompanied by a heating system attached to a focused set of compound parabolic collector cylindrical gullies (CPC) [12]. The density of PCM and the height of the solar collector required providing sufficient energy for several family sizes were also defined by the author. Ionic liquid has been tested by a number of researchers for use as a heat storage medium in solar energy systems.

The small-scale photovoltaic and thermal hybrid cooker designed and built with (a) thermal energy storage (TES), SAND (b) Ionic liquids (IL) BF4 and PF6 has been tested for performance. The cooker has been amended to make it easy to use solar cookers at any time and the maximum use of solar cookers has been studied by cooking various dishes. By monitoring a solar panel with a dual axis solar tracker, the hybrid cooker was improved. The hybrid cooker has been turned into a solar dryer and used for farming.

Solar cooking is a simple way to prepare food and clean water in isolated zones and few 3rd world nations, where individuals lack entree to energy and fuel is an assessed product. In first world countries, however, people use solar cooking to save money. United Nation (UN) and other administrations were planning to bring solar cooking to poor countries, but primary proposals were not being implemented. Nowadays, several non-profit groups advocate the use of solar cookers to reduce carbon dioxide emissions, discourage erosion, and prevent unintended explosions in areas prone to flames.

Several individuals are still depending on woods for fuel in third world countries. Solar cooking is based on the renewable energy of the sun. This helps to protect trees and animals at risk from deforestation. Electricity has also made lives brighter and less difficult, but it can make a contribution to global warming by disproportionate and unequal use. In addition, gas-powered cookers lead to climate change through smoke and fumes. You could decrease the carbon footprints and delay the damaging impacts of global heating with use of a solar cooker oven. During the summers, one should carry their cookers out and attempt various solar cooking recites in order to minimize the heat in their home. Cooking procedures which uses timber and further non-renewable fuel release into the air toxic fumes. If these gases are inhaled, air pollution and health complications may occur. Solar cooking oven uses solar energy on the other side does not create harmful pollutants and can substantially minimize water and air contamination; solar cookers are easily to assembled and disassembled. Carry it with you to social picnics, road trips, as well as vacations. Solar cookers are healthy because there is no need for an open fire or because children, pets and other people are not faced with fire hazards. The chance of wildfires from wood chimneys is also minimized. Solar cookers differ according to their fabric and style in price.

DISCUSSION

Solar cookers are a practical and convenient way to use solar energy. A solar cooker is a device that uses the solar light to prepare. Numerous experiments have established the solar cooker hypothesis. As a result, a solar cooker is a system that consumes thermal irradiance, converts it to heat, retains the thermal energy, and transfers it to food via the container frames. It can be utilized to heat, cooking foodstuff. It could also be used primarily for pasteurization and sterilization in essential processes. In the literature there are various kinds of solar cookers. In addition, new solar cookers are constantly proposed, built with new improvements that involve constant updates of the classification of solar cookers. However, the compliance with the heat transmission mechanisms in the cooking pots could be verified as indirect & direct solar cookers. Comparison of the performance and efficiency of indirect & direct solar cooker by the investigational and arithmetical examination is carried out. Boxes, panels and parabolic solar cooker are focused on direct form. Indirect types are classified by solar gatherer or energy storages. Direct cooking processes are performed directly using the sunlight, while indirect heat is transmitted through the heat transferring fluids to cooking machine. The flowchart shows key solar cooker forms in Figure 4. The reuse of cardboard packing material is simple, portable solar cooker. Such a system has demonstrated that humanitarian aid workers have a full kitchen collection for solving the fuel and timber leak issue. The cooker can be used to heat, cook meals, and boil water and clear fresh water by distinct water bodies. The researchers has planned, built and tested several prototypes for the cooker to control the optimal shapes and to forecast solar cooker performance. The findings showed that the best results for the parabolic configuration were between 14-18% performances. Figure 5 shows the classification sola cooker.

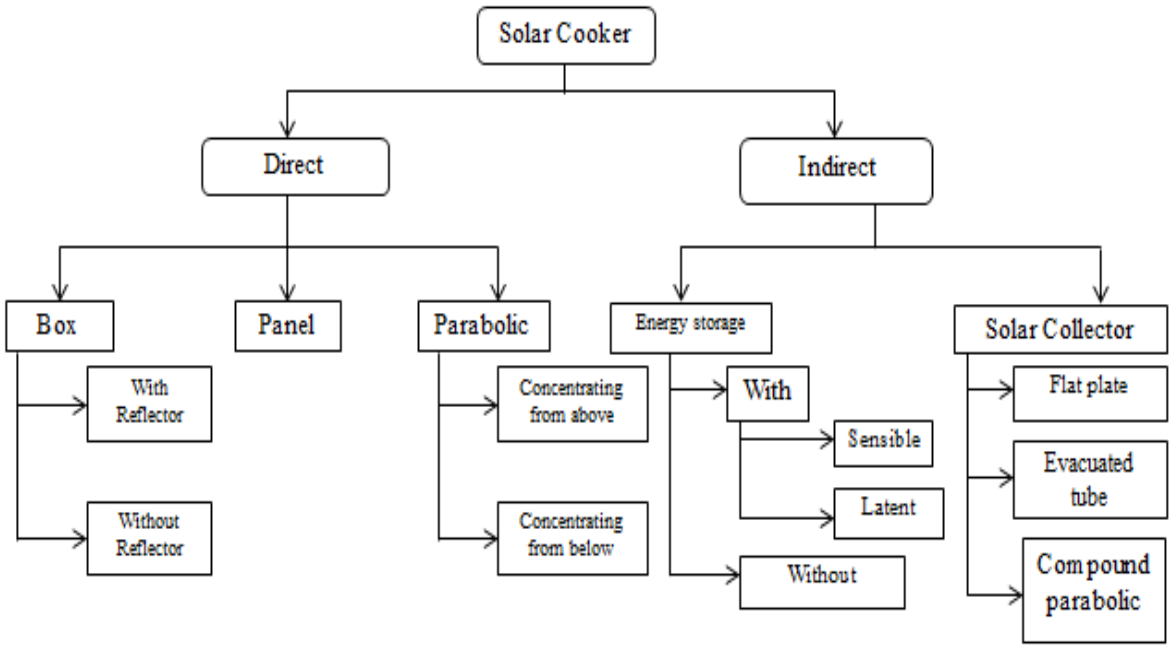

Figure 5: Illustrates the classification of solar cooker. It mainly divided into two parts. Direct and Indirect solar cooker[13].

Solar cooking is an appropriate procedure to use sunlight to satisfy the demand for cooking. To achieve the best possible performance, several researchers have tried to compare and test solar cookers. Energy analysis and exergy analysis is one of the main ways to research and assess solar cookers' efficiency. The first law for thermodynamics is based on energy analysis, which converts the supplied net heat into function. Energy supply in the solar cookers depend on the dimensions and strength of the collector, while energy supply depends on the amount of cooking flow as well as amount of cooking cups put on the sampling plate. The energy efficiency is defined as the ratio of energy supplies (E_o) to solar cooker input (E_i), denoted as η and is represented as follows:

$$\eta = \frac{Output\ energy}{Input\ energy} = \frac{E_o}{E_i} = \frac{m_w C_{p,w}(T_{wf} - T_{wi})}{I_t A_{sc} \Delta t}$$

Where $C_{p,w}$ is water-certain heat, T_{wf} the water's closing temperatures, T_{wi} is the water's original, t the time, total instant solar radiation is I_t, and A_{sc} the sun cooker's interception region.

Exergy principle is based on thermodynamics rule one and two. The exergy output & input study allows the position of solar cooker's highest degraded energy. Exergy is known as the extreme quantity of effort a system could do. The efficiency of an energy efficient solar cookers is exergy ratio (E_{xo}) to the energy consumption input (E_{xi}), denoted by Ψ. This is give in following equation.

$$\Psi = \frac{Output\ exergy}{Input\ exergy} = \frac{E_{xo}}{E_{xi}} = \frac{m_w C_{p,w}\left[(T_{wf} - T_{wi}) - \left(T_o \ln\left(\frac{T_{wf}}{T_{wi}}\right)\right)\right]}{I_t A_{sc}\left(1 - \frac{4T_a}{3T_s}\right)}$$

T_a is the air temperatures, Ts is the temperature of sun, T_o be the outside temperature. The qualitative energy estimate is an exergy analysis, while the energy analysis is a quantitative energy estimate. Exergy examination is extra suitable than energy examination for estimating the performance of the solar cookers.

Solar cookers are a good choice for solar power applications. It is an important factor in advancing and improving life. In particular, solar-powered cooker has important environmental, economic and health impacts and benefits. Solar cookers reduce their reliance on traditional power sources and thus lower pollution-reducing greenhouse gas emissions. As a consequence, people are getting healthier and far away from diseases which are extremely polluting today. The economic point of view is that the use of renewable energy sources (solar cookers) decreases the increased fossil fuel costs and saves a lot of money.

Furthermore, money expended on medical care, a luxury for people, would be saved as diseases are reduced. Furthermore, solar cooker decreases the usage of fire-wood which reduces desertification and deforestation. Solar cooker also reduces the discharge of firewood smoke, especially for children that are damaging both to the eyes and the breathing systems. In places such as Africa, wood stoves that are used inside and outside are highly dependent. Indoor emissions caused by incomplete wood burning produces carbon monoxide gas which is dangerous for lungs. The main explanation for many diseases, particularly for lung cancer and other respiratory illnesses such as asthma, etc. is the use of wood stoves.

CONCLUSION

For several decades, scientific researchers around the world have worked hard to build various kinds of solar cookers. While it can be one of the best cooking options, but the company does not consider it. There are many causes such as lack of knowledge, large sizes, bulky models, slow cooking, highly weather-dependent, predestined cooking time, etc. The hybrid cooker, which can operate at all times and cook quicker than the standard solar cooker, is designed and built to be competent for the traditional solar cooker when marketed and can be shown to be a boon for society. This study reviews the uses of solar cooker. This represents an analysis of foundations of solar cookers with a thorough explanation of the impact on their efficiency of various main parameters. Examination of exergy & energy are represented and ecological and financial studies are carried out. The effects of solar cookers on economy, people's health and the environment are clear. Therefore, the use of solar cookers is anticipated in countries like third world countries, in particular, as well as worldwide. Governments and social organizations, dependent on the local price of apparatuses and weather, can play an important role to suggest a more appropriate form of solar cooker. The care of solar cookers is critical problem, especially when using oil working fluid.

REFERENCES

[1] A. Herez, M. Ramadan, and M. Khaled, "Review on solar cooker systems: Economic and environmental study for different Lebanese scenarios," *Renewable and Sustainable Energy Reviews*, vol. 81. Elsevier Ltd, pp. 421–432, Jan. 2018, doi: 10.1016/j.rser.2017.08.021.

[2] R. Bernard, "HANDY SOLAR COOKER.," *Sunworld*, vol. 11, no. 2, pp. 50–51, 1987.

[3] A. Dang, "An analytical study of a solar cooker augmented with a booster mirror, using PCM as storage," *Energy Convers. Manag.*, vol. 25, no. 3, pp. 255–261, 1985, doi: 10.1016/0196-8904(85)90041-X.

[4] H. P. Garg and D. S. Hrishikesan, "Enhancement of solar energy on flat-plate collector by plane booster mirrors," *Sol. Energy*, vol. 40, no. 4, pp. 295–307, 1988, doi: 10.1016/0038-092X(88)90002-3.

[5] A. V. Narasimha Rao, T. L. Sitharama Rao, and S. Subramanyam, "Mirror boosters for solar cookers-III," *Energy Convers. Manag.*, vol. 32, no. 1, pp. 51–58, 1991, doi: 10.1016/0196-8904(91)90142-6.

[6] D. Buddhi and L. K. Sahoo, "Solar cooker with latent heat storage: Design and experimental testing," *Energy Convers. Manag.*, vol. 38, no. 5, pp. 493–498, 1997, doi: 10.1016/S0196-8904(96)00066-0.

[7] A. H. Algifri and H. A. Al-Towaie, "Efficient orientation impacts of box-type solar cooker on the cooker performance," *Sol. energy*, vol. 70, no. 2, pp. 165–170, 2001, doi: 10.1016/S0038-092X(00)00136-5.

[8] N. M. Nahar, "Performance and testing of an improved hot box solar cooker," *Energy Convers. Manag.*, vol. 30, no. 1, pp. 9–16, 1990, doi: 10.1016/0196-8904(90)90051-Y.

[9] A. V. Sonune and S. K. Philip, "Development of a domestic concentrating cooker," *Renew. Energy*, vol. 28, no. 8, pp. 1225–1234, 2003, doi: 10.1016/S0960148102001878.

[10] U. R. Prasanna and L. Umanand, "Modeling and design of a solar thermal system for hybrid cooking application," *Appl. Energy*, vol. 88, no. 5, pp. 1740–1755, 2011, doi: 10.1016/j.apenergy.2010.11.042.

[11] D. L. Bushnell and M. Sohi, "A modular phase change heat exchanger for a solar oven," *Sol. Energy*, vol. 49, no. 4, pp. 235–244, Oct. 1992, doi: 10.1016/0038-092X(92)90002-R.

[12] A. Herez, M. Ramadan, and M. Khaled, "Review on solar cooker systems: Economic and environmental study for different Lebanese scenarios," *Renew. Sustain. Energy Rev.*, vol. 81, no. February 2017, pp. 421–432, 2018, doi: 10.1016/j.rser.2017.08.021.