Modal and Harmonic Analysis of Master Rod Using Structural Steel A36

[1]Sagar S R, [2]Srikanth K M, [3]Kari Ramakrishna, [4]Dr. A. Hareesh
[1]ISO Co - Ordinator, [2, 3]Assistant Professor, [4] Professor
[1]ISO Department Confident Dental Equipments Pvt Ltd, Bidadi – 562109, Bangalore (India)
[2, 3]Department of Mechanical Engineering, Amruta Institute of Engineering and Management sciences, Bidadi – 562109,Bangalore (India).

Abstract: In a radial engine, the piston in one cylinder in each row is connected to the crank shaft by a master rod. The master rod assists the connecting link between the piston pin and the crank pin. The crank pin end contains the master rod bearing. The present work explains design and analysis of master rod. At present master rod is manufactured by using Forged steel material. In the present work 2D drawing is drafted based on calculations. A Parametric model of master rod is modeled using CATIA V5 R20 software, modal and harmonic analysis is carried out by using the ANSYS 14.5 software. FEA of master rod is carried out by considering the materials like SSA36. To present better analysis for various parameters like Total Deformation of 1, 2, 3, 4, 5 and 6 for master rod of SSA36 were done in ANSYS 14.5 software. Also, graphs for different parameters were plotted in Amplitude V/S frequency response 1 and 2 (HZ).

***Index Terms* - ANSYS 14.5, CATIA V5 R20, SS A36**

NOMENCLATURE

A = Area of cross section of the master, L = Stroke Length of the master rod, D = Diameter of the Piston, r = radius of the crank, W_{cr} = Buckling load, SS = Structural Steel, Al = Aluminium = Angular speed, Θ = Crank Angle of Dead Centre, I_{x-x}=Moment of Inertia of the I – Section about the x -axis, I_{y-y} =Moment of Inertia of the I – Section about the y -axis, k = Radius of gyration.

I. INTRODUCTION

The radial engine is a reciprocating type internal combustion engine configuration in which the cylinders radiate outward from a central crankcase like the spokes of a wheel. It resembles a stylized star when viewed from the front, and is called a star engine. The radial configuration was commonly used for aircraft engines before gas turbine engines became predominant. Since the axes of the cylinders are coplanar, the connecting rods cannot all be directly attached to the crankshaft unless mechanically complex forked connecting rods are used, none of which have been successful. Instead, the pistons are connected to the crankshaft with a master and articulating-rod assembly. One piston, the uppermost one in the animation, has a master rod with a direct attachment to the crankshaft. The remaining pistons pin their connecting rod's attachments to rings around the edge of the master rod. Extra "rows" of radial cylinders can be added in order to increase the capacity of the engine without adding to its diameter. Four radials have an odd number of cylinders per row, so that a consistent every-other-piston firing order can be maintained, providing smooth operation. The radial engine normally uses fewer cam lobes than other types. As with most four-strokes, the crankshaft takes two revolutions to complete the four strokes of each piston.

The software has been developed for ANSYS R 14.5 with CATIA V5 R20. By using the pre-processor, the pattern is streamlined in ANSYS. Diverse regions of the radial engine are related by equations. Harmonic analyzes of various maps regarding frequency and amplitudes are performed. Project research reports are collected and all the findings from ANSYS R 14.5 workshops mentioned.

However, the small part of the master thread, which is actually in the hammer, attached to the piston gudgeon pin or brace plate, will swing in the frame. For the reciprocal load described on the piston after the spread and even compressed by all rotations, the master stroke undergoes tremendous stress.

The load raises to the 3rd power and the engine speed decreases. The failure of a connecting rod that is usually referred to as a "rod throw," is one of the most common reasons for the catastrophic failure of the engine in aero planes which frequently throws the damaged rod across a piston side and even makes the motor irreparably tired of the rod lubrication of failure of a bearing due to a body fatigue.

Despite their frequent occurrence inside the aircraft occasions such disasters are quite uncommon on production aircraft during normal conditions. A radial type of 5 star engines is used in MOKI-S AIRCRAFT as shown in fig 1. The radial engine assembled with master rod by taking a critical part of 5 star engines into consideration and analyzed the master rod of engine.

Figure 1: Five Star Radial Engine

II. SPECIFICATIONOF THE PROBLEM

The objective of the present work is to design and analysis of master rod made of Structural Steel A36 and Aluminium T6 6061. Master rods are usually manufactured by the materials like steel. Master rod was modeled in CATIA V5 R20. Then Model is imported to ANSYS 14.5 for analysis. After analysis a comparison is made between Structural Steel A36 and Aluminium T6 6061 in terms of stress distribution, Total deformation, Fatigue life, Fatigue damage and Safety factor.

III. DESIGN CALCULATIONS FOR EXISTING MASTER ROD

Flange Thickness (t) = 5mm

I – Section Width (B) = 4t = 20mm

I – Section Height (H) = 5t = 25mm

I – Section Area (A) = $11(t)^2$ = 275 mm^2

Height of the Big End(H_2)= (1.1 - 1.25) H =28mm

Height of the Small End (H_1) = (0.9 – 0.75) H = 23mm

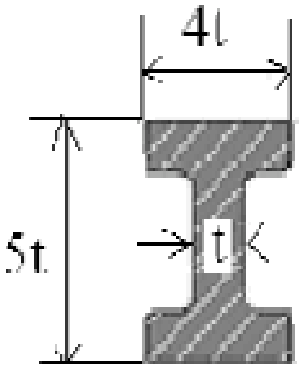

Figure 2: I – Section Standard Dimension

M. O. I of I- Section about x – axis is given by

$I_{x-x} = 1/12(BD^3-bd^3)$

$= 1/12\{4t\ (5t)^3-3t\ (3t)^3\}$

$= 34.91t^{2*2}$

$I_{x-x} = 21818.75\ mm^4$

M. O. I of I- Section about y – axis is given by

$I_{y-y} = 1/12(bd^3-BD^3)$

$= 1/12\{2t\ (4t)^3+3t\ (t)^3\}$

$= 10.91t^{2*2}$

$I_{y-y} = 6818.75\ mm^4$

Ratio of I_{x-x} and I_{y-y}

length of master rod (n^1) = L/ r

= 2

Angular speed (w) is given by

$\omega = 2\pi N / 60$

$= 2\pi 1500/60$

$\omega = 157.1$ rad/sec

Inertia force of reciprocating parts

$$F = \frac{1000WrV^2}{gr} Cos\theta \pm \frac{Cos2\theta}{n^1}$$

Weight of Reciprocating Parts

W = mg = 2(9.81) = 19.62N

Crank Angle for Dead Centre (Θ) = 0

Acceleartion due to Gravity (g)= 9.81 m /Sec^2

$= I_{x-x} / I_{y-y}$

$= 3.19$

Radius of gyration (K_{xx})

$K = \sqrt{(I_{x-x} / A)}$

$= 1.78t$

$= 8.9.$

W.K.T

Stroke length (L) = 32 mm.

crank radius (r) = L/2

= 16 mm.

$v = rw = 9.81 m/s$

$F_i = 15036.8N$

Total force of Master rod

$F_C = F_P - F_i$

F_P = Force of piston = 21800N

Fc = 21800 – 15036.8

Fc = 6764N

Table1: Parameters of Master Rod

Sl. no	Parameters	Mm
1	Thickness of the Master Rod	5
2	Width of the Section (B=4t)	20
3	Height of Section (H=5t)	25
4	Height of the Big End	28
5	Height of the Small End	23
6	Inner Diameter of Small End	24
7	Outer Diameter of Small End	35
8	Inner Diameter of Big End	52
9	Outer Diameter of Big End	69

Table 2: Mechanical Properties of SS A36 and Al T6 6061

Sl .no	Mechanical Properties	Unit	SSA36	Al T6 6061
1	Density	kg/m³	7850	2770
2	Co-efficient of thermal expansion	/c	1.2e-5	2.3e-5
3	Young's modulus (E)	Mpa	2e5	2e5
4	Poisson's ratio	-	0.3	0.33
5	Bulk modulus	Pascal	1.6667e11	6.9e11
6	Shear modulus	Pascal	7.6923e11	2.66992e10
7	Tensile yield strength	Mpa	250	280
8	Compressive yield strength	Mpa	250	280
9	Tensile ultimate strength	Mpa	460	310
10	No. of cycle to failure	-	$1x10^6$	$1x10^8$

Table-3: Chemical Properties of SS A36 and Al T6 6061

Sl.no	Chemical Elements	Symbol	Atomic no	SS A36 in %	Al T6 6061 in %
1	Carbon	C	6	0.25-0.290	-
2	Copper	Cu	29	0.20	0.15-0.40
3	Iron	Fe	26	98.0	0.7
4	Manganese	Mn	33	1.03	0.8-1.2
5	Phosphorous	P	15	0.040	-
6	Silicon	Si	14	0.280	0.4-0.8
7	Sulphur	S	16	0.050	-
8	Zinc	Zn	30	-	0.25
9	Titanium	Ti	22	-	0.15
10	Chromium	Cr	24	-	0.04-0.35
11	Other	-		-	0.05

Table 4: Boundary Conditions of Master Rod

Standard earth gravity	9806.6 mm/s
Fixed support	-
Rotational velocity	Up to 6000rpm
Force 2	-6764 N
Force 1	6764 N

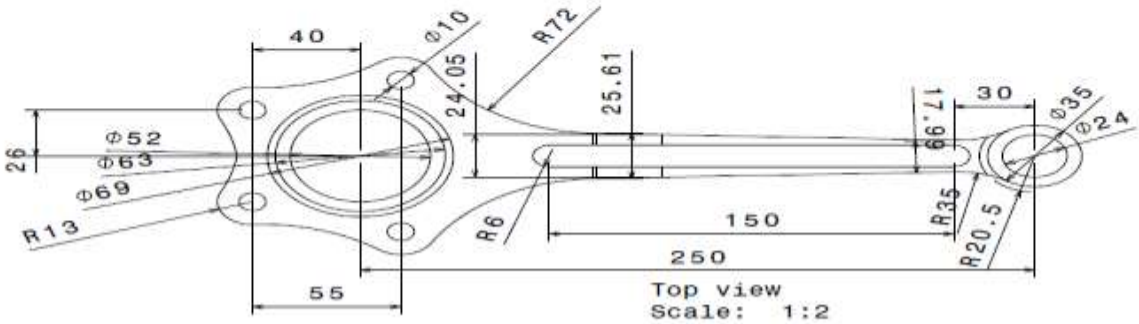

Figure 3: 2D Drawing of Mater Rod

IV. 3D Modeling of Master Rod Using CATIA V5 R20

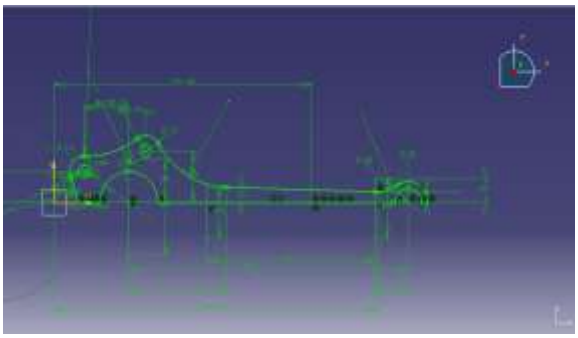

(a)

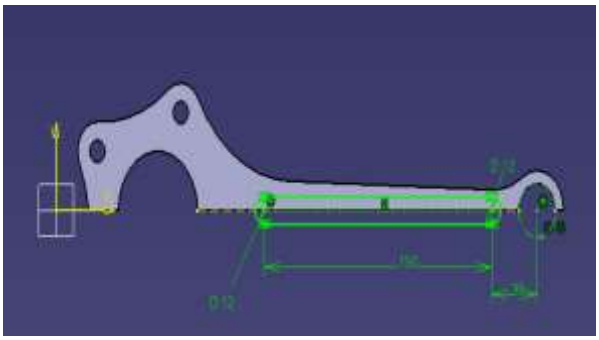

(b)

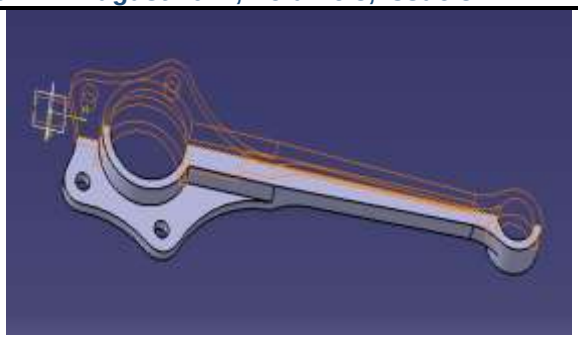

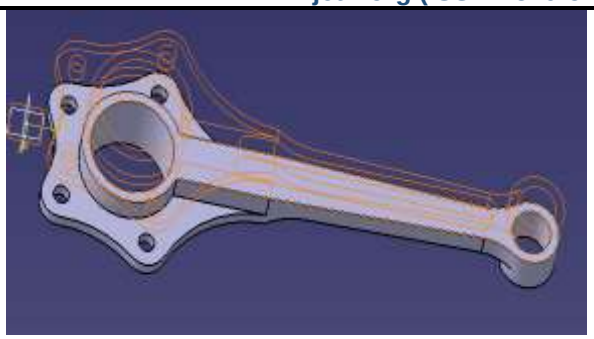

(c) **(d)**

Figure 4: Different Stages of Master Rod is modeled by using CATIA V5 R20 (a) Dimensions according to table (b) Extruded Half (c) Mirroring of Half Master Rod (d) Mirroring of Full Master Rod

V. RESULT ANALYSIS OF THE MASTER ROD

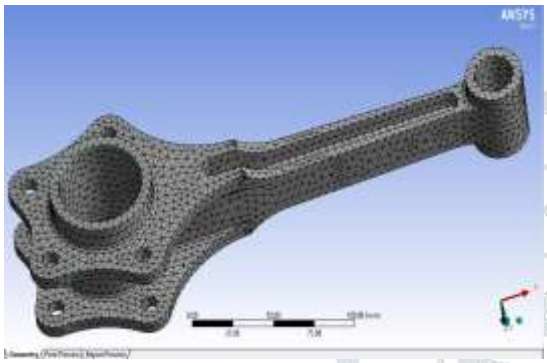

Figure 5.1: Meshing of the model

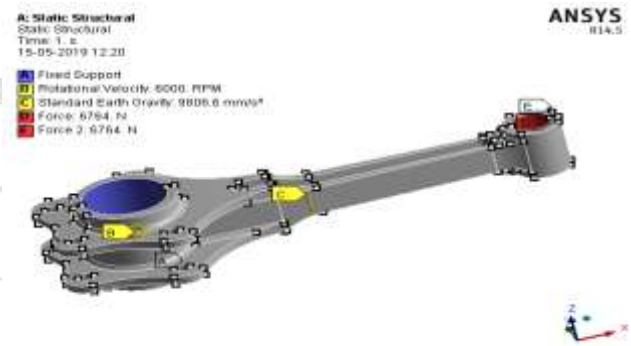

Figure 5.2: Boundary conditions given for the model

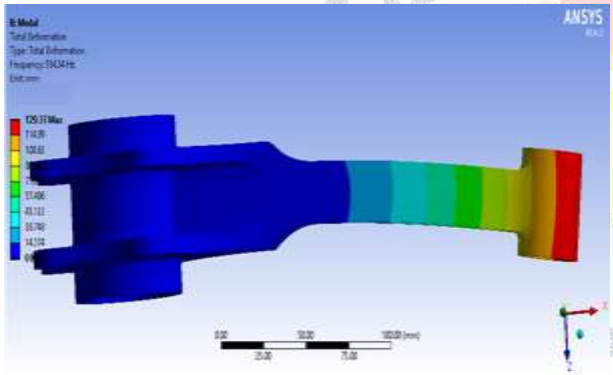

Figure 5.3: Total deformation 1 for master rod SS

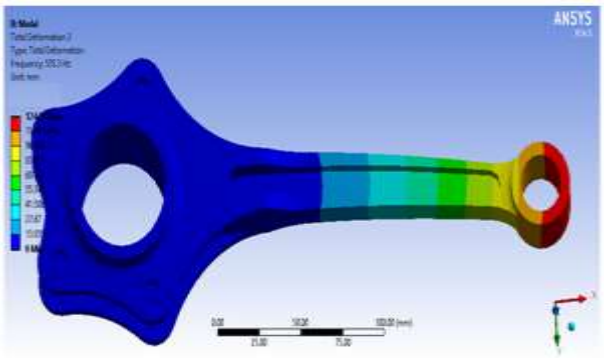

Figure 5.4: Total deformation 2 for master rod SS

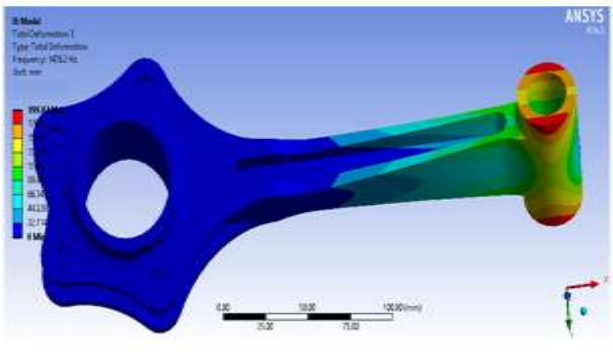

Figure 5.5: Total deformation 3 for master rod SS

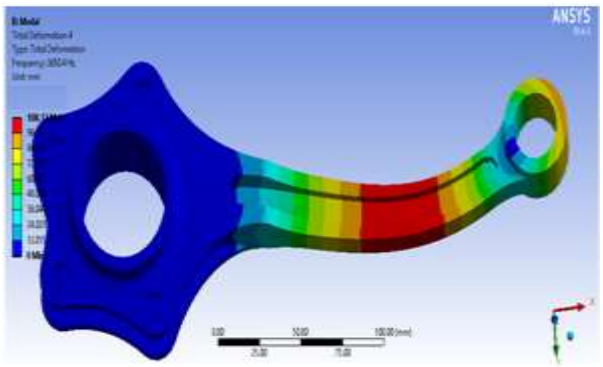

Figure 5.6: Total deformation 4 for master rod SS

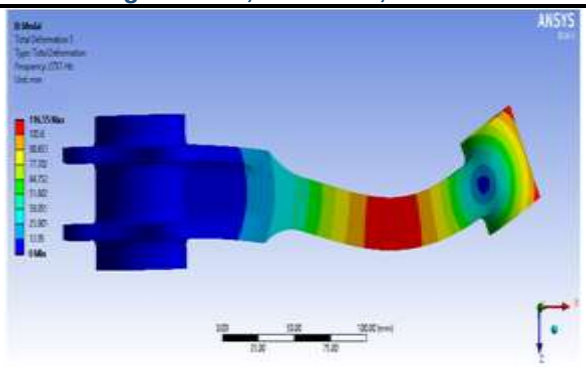

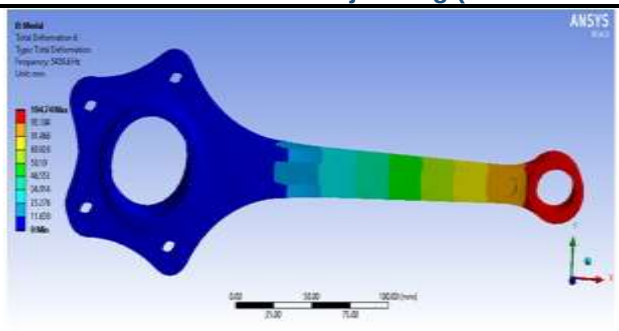

Figure 5.7: Total deformation 5 for master rod SS **Figure 5.8: Total deformation 6 for master rod SS**

Table 5: Total deformations of modal analysis for Structural Steel

Object Name	**Total Deformation**					
Scope						
Scoping Method	Geometry Selection					
Geometry	All Bodies	1 Body				
Definition						
Mode	1	2	3	4	5	6
Suppressed	No					
Results						
Minimum	0 mm					
Maximum	129.37 mm	124.52 mm	199.03 mm	108.13 mm	116.55 mm	111.34 mm
Information						
Frequency	534.34 Hz	535.30 Hz	1476.2 Hz	2630.4 Hz	2737.1 Hz	5438.60 Hz

Table 6: Harmonic response solution for Structural Steel

Object Name	**Solution Information**
Solution Information	
Solution Output	Solver Output
Newton-Rapson Residuals	0
Update Interval	2.5s
Display Points	All
FE Connection Visibility	
Activate Visibility	Yes
Display	All FE Connectors
Draw Connections Attached To	All Nodes
Line Color	Connection Type
Visible on Results	No
Line Thickness	Single
Display Type	Lines

Table 7: Harmonic response results for Structural Steel

Object Name	Equivalent Stress
Scope	
Scoping Method	Geometry Selection
Geometry	All Bodies
Definition	
Type	Equivalent (von-mises) Stress
By	Frequency
Frequency	6000 Hz
Phase Angle	0°
Identifier	-
Suppressed	No
Integration Point Results	
Display Option	Averaged
Results	
Minimum	7.4967e-003 Mpa
Maximum	164.77 Mpa
Information	
Reported Frequency	5438 Hz

Table 8: Harmonic response equivalent stress for Structural Steel

Object Name	Frequency Response 1	Frequency Response 2
Scope		
Scoping Method	Geometry Selection	
Geometry	102 Faces	
Spatial Resolution	Use Average	
Definition		
Type	Normal Stress	Directional Deformation
Orientation	X Axis	
Suppressed	No	
Options		
Frequency Range	Use Parent	
Min. Frequency	0 Hz	
Max. Frequency	10000 Hz	
Display	Bode	
Results		
Max. Amplitude	39.905 Mpa	7.8019e+007 mm/s²
Frequency	5000 Hz	
Phase Angle	180°	
Real	-39.905 Mpa	-7.8019e+007 mm/s²
Imaginary	0 Mpa	0 mm/s²

V.I GRAPHS FOR STRUCTURAL STEEL (MODAL AND HARMONIC)

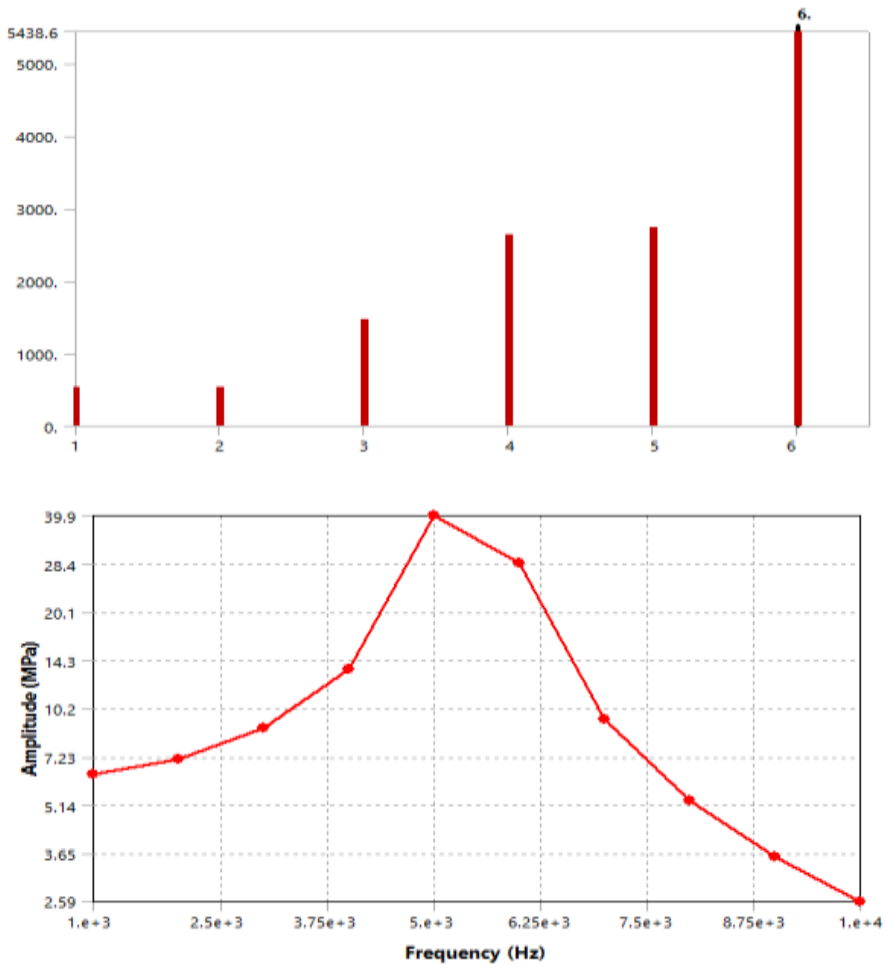

Fig 6.1: Amplitude v/s frequency response 1

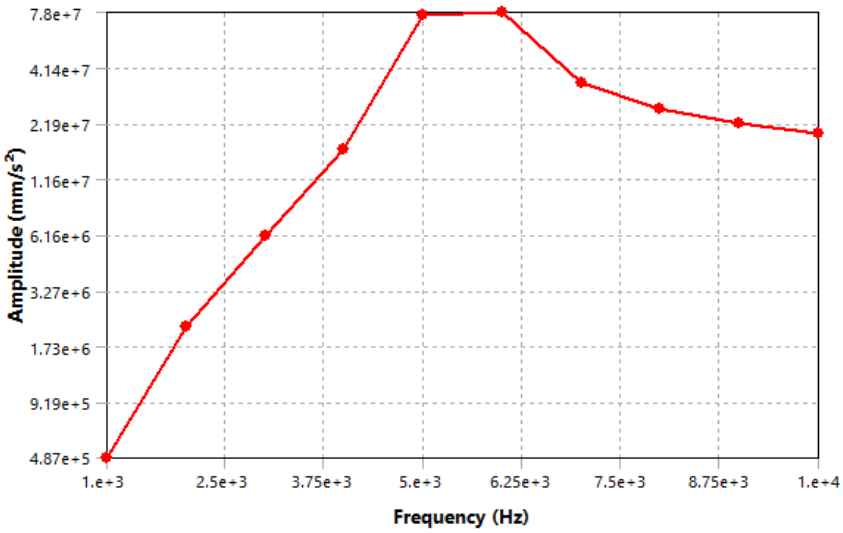

Fig 6.2: Amplitude v/s frequency response 2

IV. RESULTS AND DISCUSSION

In the present work Solid Modeling of Master Rod is modeled by using CATIA V5R20 and Simulation was done by using ANSYS 14.5. Analysis was performed for few parameters like Total Deformation of 1, 2, 3, 4, 5 and 6 for master rod of SSA36 were done in ANSYS 14.5 software. Also, graphs for different parameters were plotted in Amplitude V/S frequency response 1 and 2 (HZ).

The total deformation distribution in radial engine connecting rod with steel is 0.09mm and Minimum deformation is 0mm, because at the fixed end geometry does not allow to deform. Similarly for aluminum alloy maximum deformation of 0.33mm and minimum deformation of 0mm.

Fatigue life $1.19x10^5$ cycles was observed in the geometry, which is clearly shown in red colour region at crank end and maximum fatigue life $1x10^6$ and similarly for aluminium Fatigue life $2.94x10^5$ cycles and maximum fatigue life $1x10^8$. Aluminium Alloy has 59.52% more fatigue life and strength than structural steel.

Factor of safety is used to check the strength and weaker sections of the geometry, it is observed that weaker section with factor of safety for structural steel is 0.65 and for aluminum alloy is 0.52 respectively. This results shows that to overcome the failure in weaker section should increase thickness.

At fixed end minimum deformation is 0mm. The maximum deformation observed at the free end is 0.09mm for structural steel material and 0.33mm for aluminium alloy. From the modal and harmonic analysis we come to now the aluminium alloy is better material.

REFERENCES

[1] Dynamic Load Analysis and Optimization of a Connecting Rod- _R. Ravi, K.V.P.P. Chandu, B. Subramanyam.

[2] Design of connecting rod of internal combustion engine a topology optimization approach-m.s. shaari1, m.m. rahman1,2, m.m. noor1, k. kadirgama1 and a.k. amirruddin1.

[3] Modeling and Analysis of Two-Wheeler Connecting Rod -K. Sudarshan Kumar1, Dr. K. Tirupati Reddy2, Syed Altaf Hussain3.

[4] Kuldeep B1, Arun L.R2, Mohammed Faheem P.G. Scholar, Department of Mechanical Engineering, The Oxford college of Engineering, Karnataka, India, Associate Professor, Department of Mechanical Engineering, The Oxford college of Engineering, Karnataka, India

[5] Fatigue analysis of connecting rod of universal tractor through finite element method (ANSYS)-A. Mirehei, M. HedayatiZadeh, A. Jafari, M. Omid Department of Agricultural Machinery Engineering, Faculty of Bio system Engineering, University of Tehran, Iran.

[6] Static *Stress* Analysis of Connecting Rod Using Finite Element Approach_ AbhinavGautam1, K Priya Ajit_1 M. TECH Student, Department of Maintenance Engineering and Tribology, ISM, Dhanbad 2 Assistant professor, Department of Mining Machinery Engineering, ISM, Dhanbad.

[7] Garima Chaudhary Department of Aerospace Engineering University of Petroleum and Energy Studies, Satyam Saini Department of Aerospace Engineering University of Petroleum and Energy Studies, Sandeep Sharma Technical Head Aero Sphere.

[8] Srikanth kumar and B. Jitendra (IETRJ) International Engineering and Technology Research Journal, Vol. 2(1), 2015, 131-135.

[9] Design Data Hand Book (DDH), K. Mahadevan and Dr. K. Balaveera Reddy-B. S Publishers and Distributors.

[10] Machine Design Exercises, S.N Trika, Khanna Publishers.

[11] High Speed Combustion Engines, P.M. Heldt, Oxford and IBH Publishing Co.

[12] Automotive Design, R.B. Gupta.

[13] Automotive engine fundamentals F.E. PeacCock. T.E. Gaston Reston automotive Series Pub.

[14] Moulded Engine Castings, "General - MotorsApril1956, Eng. J.3, March 12. Review of G.M. methods and techniques.

[15] 1951, 42 and Sons, Inc., New York, 1966. Recent, Authoritative. Includes Theory, materials design, Manufacturing.

[16] (1940). Continental-opposed cylinder air-cooled line. Aviation Industries 93, Dec. 15, 1945. Post war series of horizontal- Opposed air-cooled engines. Cambridge, Mass., 1950. Corp., Detroit, 1961. Trans.SAE 47, 301

[17] (1940). Loaming 4-cylinders horizontal opposed engine with internal spur gear and second order and fourth-order Pendulum vibration absorber

[18] Aviation, July 1933, 201. Rational Approach to choice of stroke-bore ratio for radial engines. An example of good analysis of a major design problem.

[19] Leela Krishna Vegi, Venugopal-Design and Analysis of Connecting Rod Using Forged steel

[20] Finite Element Analysis of Connecting Rod Using Ansys 1nikhil U. Thakare, 2nitin D. Bhusale, 3rahul Shinde, 4mahesh M. Patil 1,3,4b.E., Babasaheb Naik College of Engineering, Pusad, Maharashtra, India, 2research Scholar.