JETIR.ORG ISSN: 2349-5162 | ESTD Year : 2014 | Monthly Issue
JOURNAL OF EMERGING TECHNOLOGIES AND INNOVATIVE RESEARCH (JETIR)
An International Scholarly Open Access, Peer-reviewed, Refereed Journal

POWER QUALITY IMPROVEMENT IN CO-PHASE TRACTIO POWER SUPPLY SYSTEM BY USING ALTERNATE PHASE OPPOSITION DISPOSITION TECHNIQUE IN ASYMMETRIC THREE-LEG HYBRID POWER QUALITY CONDITIONER

[1]J. Bharathi1 A. [1]Surya Prakash Reddy C. [1]Ashiya Begum [1]C. Raviteja [1]Ch. Sai Preethi [2]M.S.Sujatha [3]S.Sreelakshmi

[1]Student, Department of EEE Sree Vidyanikethan Engineering College -Tirupati ,AP-517102,India
[2,3]Professor,Department of EEE ,Sree Vidyanikethan Engineering College -Tirupati ,AP-517102,India
Email: juturubhaathi2001@gmail.com

Abstract : Generally high speed rails are run by single phase 25kv AC traction power supply system. Here rail acts as a load therefore it draws a large amount of unbalanced inductive power from the two phases of the grid through the traction transformer at neutral section. Then, it leads to several problems like unbalanced voltage, reactive power existence and high Total Harmonic Distortion (THD). These problems are overcame by using Railway Power Conditioner (RPC) or Hybrid Power Quality Conditioner (HPQC). Modular Multilevel Converter(MMC) based Asymmetrical Three-leg Hybrid Power Quality Conditioner by using phase-shifted Pulse Width Modulation technique is proposed due to the drawback of additional bulky and expensive coupling transformer in HPQC. Here the Asymmetrical Three-leg Hybrid Power Quality Conditioner by using phase-shifted Pulse Width Modulation technique is extended by Alternate Phase Opposition Disposition Pulse Width Modulation technique ,THD analysis for ATHPQC using phase-shifted PWM technique and APOD PWM technique will be examined.

Keywords: Asymmetric, traction power supply system, hybrid power quality conditioner(HPQC), railway power conditioner(RPC).

I. INTRODUCTION

Locomotives play a major role in our daily life. Single phase AC 25 Kv feeder is used for railway traction supply. With the advancement of technology high speed rails are developed. Modern locomotives draw a large of amount of unbalanced, inductive power from two phase of the grid through traction transformer and lead to severe problems of negative voltage unbalance and reactive power existence. Traditional TPSS(Traction power supply) used to have neutral section between adjacent traction substations. Due to the presence of neutral section locomotives loses their power supply for few seconds, but to the high momentum locomotives crosses this neutral section and regain their power supply. Even the trains lose their power for few seconds also, it leads large power quality issues. To overcome this co phase TPSS (Traction power supply system) is proposed. Co-phase TPSS with Railway Power Conditioner (RPC) or Hybrid Power Quality Conditioner (HPQC) has been studied to mitigate power quality problems Both of them can resolve system unbalance, reactive power and harmonics problems simultaneously. The capacitive coupled HPQC overcomes the problem of high operation voltage in RPC by reducing the device rating and power loss in a co-phase TPSS. . The draw back in HPQC is bulky, costly transformer used for reducing the 2-leg MMC (modular multilevel converter). To overcome this 3-leg HPQC is proposed and named as ATHPQC (Asymmetric Three-leg Hybrid Power Quality Conditioner). Removal of coupling step-down transformer in proposed ATHPQC while its dc bus voltage is the same as that of symmetrical HPQC based on MMC with 2-legs. Development of an asymmetrical back-to-back MMC for ATHPQC, which is the first of its kind to our best knowledge. Its internal circulating current modeling, design, and control are implemented for the asymmetrical HPQC.

But this system has switching loses, high THD and harmonics. To decrease the THD and harmonics PWM technique like APOD (Alternate phase opposition disposition technique) is proposed. This switching technique reduces the power quality problems in the existing switching technique used in ATHPQC.

II. PROPOSED METHOD

A. Block diagram

In this part, an ATHPQC is proposed to remove the coupling transformer on both sides of HPQC and minimize the current of the -phase. For the proposed ATHPQC, a three-leg back-to-back MMC is built, as shown in Fig.1 -leg, #1-leg, and #2-leg are the names of the three legs, respectively. At -phase, the Dc bus and the -leg create a half-bridge converter that is coupled to Va through a coupling capacitor. The reactive power conditioning requirement at this period dictated the design of this capacitor. The -phase operation voltage is normallysubstantially lower than the TPSS feeder voltage. As a result, HPQC's dc bus voltage can be reduced.

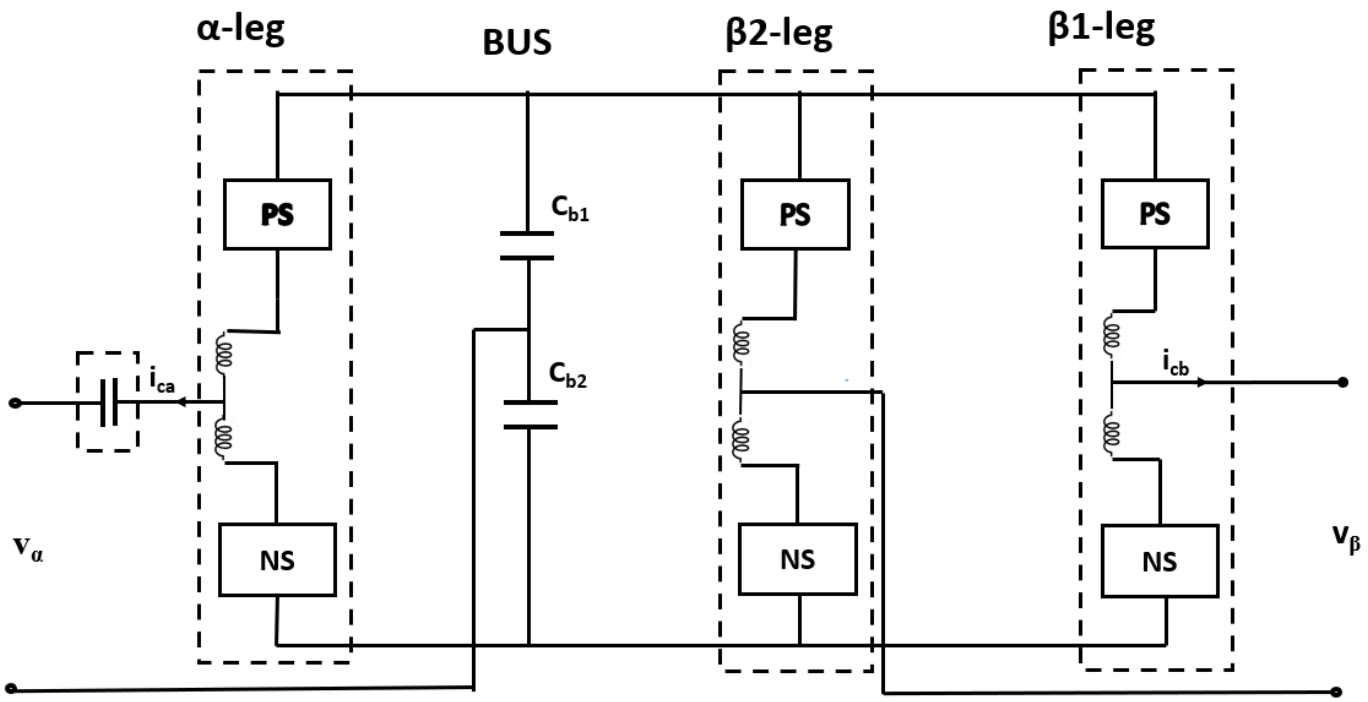

Fig: 1 **Asymmetrical Three-leg Hybrid Power Quality Conditioner**

The dc bus is paired with the #1-leg and #2-leg to generate a full-bridge converter when in phase. In comparison to a half-bridge converter, the full-bridge topology doubles the output voltage. The output capability of the -phase converter is doubled in this configuration as compared to the -phase converter. The output range of the proposed ATHPQC at two phases exactly matches the requirement of HPQC, as previously described. As a result, an extra transformer is no longer required.

B. Circuit diagram

As shown in Fig. 1, each leg of the proposed ATHPQC is made up of two stacks: a positive stack (PS) and a negative stack (NS) (a). This pair of stacks is controlled by opposite voltage references. In Fig. 2, the analogous circuit for the above block diagram is shown, with currents flowing through each stack highlighted. An isolated ac voltage source is modelled as a pair of stacks. Where, ip and in are currents passing through the PS and NS. Vdc and Vac are dc side voltage and ac side voltage of a leg. ICIR stands for circulating current cycling between the dc side and one of the MMC's legs. The compensating current that each leg injects into the TPSS is referred to as ic. Compensating voltages are Vca and Vcb.

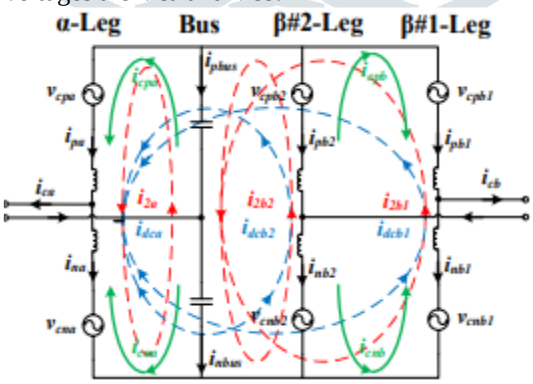

Fig :2 Equivalent circuit of ATHPQC

The proposed ATHPQC offers unbalanced operation voltages, which are required by co-phase TPSS, without the use of an additional step-down transformer, by combining the advantages of capacitive half-bridge and inductive full-bridge. A fundamental problem in adopting the MMC-based ATHPQC is its internal circulating current analysis. In terms of compensatory current, circulating current changes. It passes through each leg, resulting in a power transfer between the ATHPQC legs. The current rating of all switches and passive components is strongly affected by circulating current. Internal current modelling of the proposed asymmetrical back-to-back MMC is investigated for the first time in the following section.

C. Control Scheme

The Control system of the proposed ATHPQC is implemented, and its block diagram is shown in Fig.3 The control system is mainly composed of a compensating reference calculation module, voltage balancing module, and phase-shifted pulse width modulation (PWM) module.

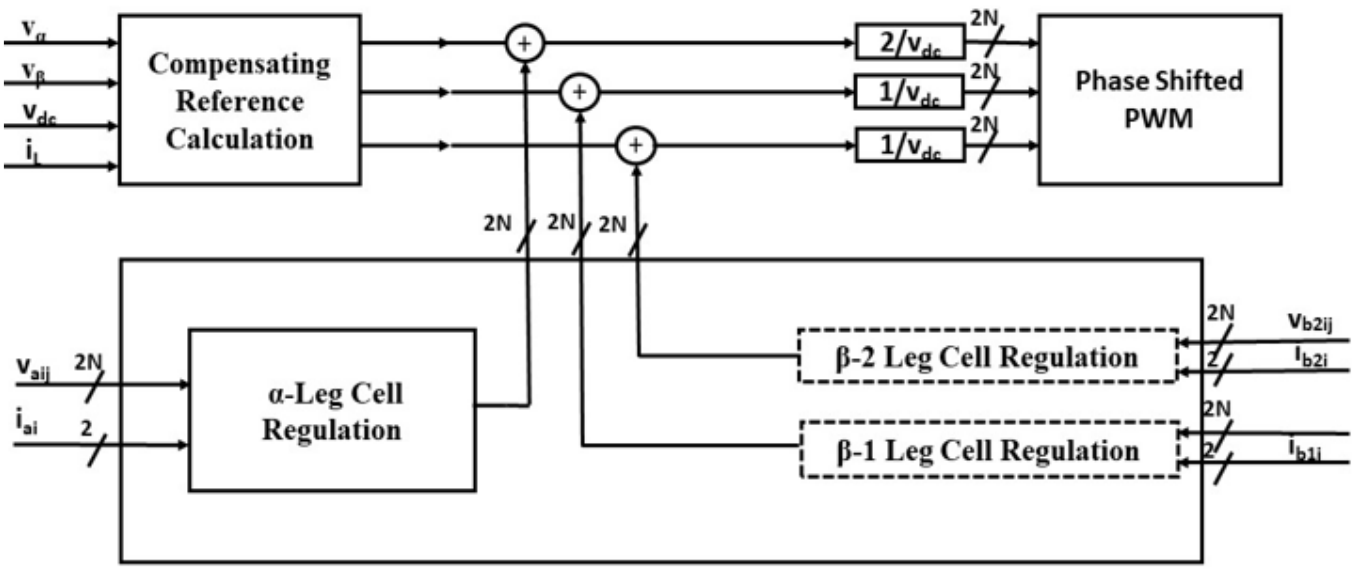

Fig: 3 Control Scheme for ATHPQC

i. Compensating Reference Calculation

ii. The proposed ATHPQC inject active and reactive power into the supply system from its two phases to correct for imbalance and reactive power generated by traction loads. compensating reference calculation block diagram. It's worth noting that the active power balancing of the back-to-back MMC has an impact on standard bus voltage. The active power regulation of the -phase converter is integrated with dc bus voltage management . The dc bus upper and lower capacitor balancing is accomplished by transmitting a control signal back to the -phase reference current. For regulating converters, both PR and PI controllers are widely used. On the -phase converter, the performance of two controllers is comparable. As a result, the PI controller is utilised in the -phase because it is simple and straightforward to construct. PR controller can improve the current tracking error of the LC-coupling converter.PR controller is used to controlling the α-phase converter so that a satisfying performance is achieved.

iii. ii. Individual Balancing

iv. The output voltage is always many times higher than the cell voltage. As a result, in MMC applications, individual voltage stability and uniformity are critical. In this case, an individual balancing approach based on stack current direction is employed.

v. **D. Alternate Phase Opposition Disposition Pulse Width Modulation Technique**

vi. Sinusoidal Pulse Width Modulation for Alternate phase opposition disposition (APOD) modulation, every carrier waveform is out phase with its neighboring carrier wave by 180 degree. The figure demonstrates the sine-triangle method for a five level inverter. Therein, the phase modulation signal is compared with four (N1 in general) triangle waveforms.

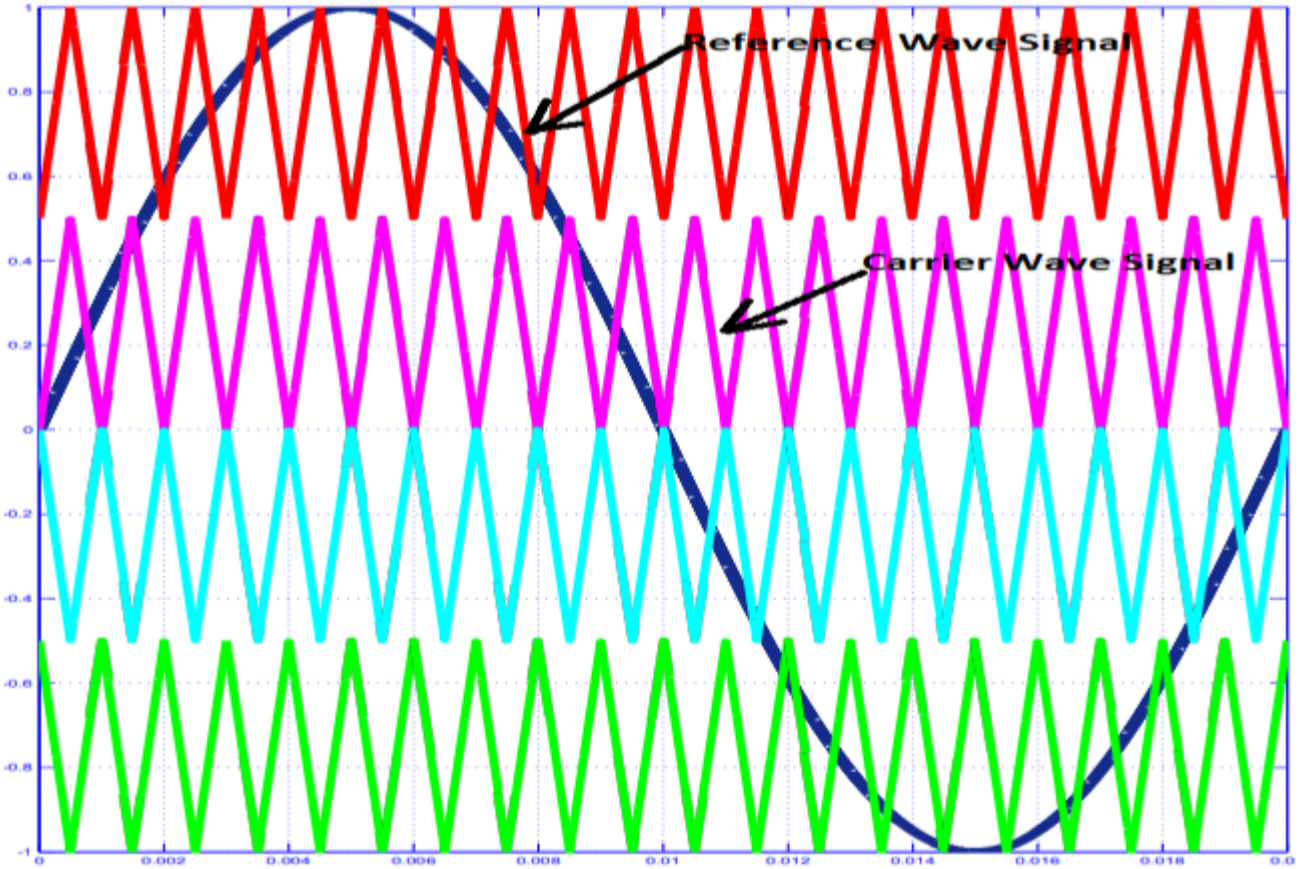

Fig: 4 Alternate Phase Opposition Disposition Pulse Width Modulation Technique

The rules for the alternate phase opposition disposition method, when the number of level N=5 are The N –1 = 4 carrier waveforms are arranged so that, every carrier waveform is out phase with its neighbouring carrier wave by 180 degree. The converter is switches to +1

vdc when the reference is greater than all the carrier waveforms. The converter is switches to+2 vdc when the reference is less than the uppermost carrier waveform and greater than all other carriers. The converter is switches to ZERO when the reference is less than the two uppermost carrier waveform and greater than all other carriers. The converter is switches to -2 vdc when the reference is lesser than all the carrier waveforms. In this technique, carrier waves with variable switching frequencies of 2KHz and 4KHz are compared with the reference wave of 50Hz as shown in Fig.

Alternate Phase Disposition (APOD) In case of alternate phase disposition (APOD) modulation [4], [5], every carrier waveform is in out of phase with its neighbour carrier by 180 degree. Since APOD and POD schemes in case of seven-level inverter are the same, a seven level inverter is considered to discuss about the APOD scheme. The rules for APOD method, when the number of level m = 7, are

▪ The m – 1 = 6 carrier waveforms are arranged so that every carrier waveform is in out of phase with its neighbour carrier by 180degree.

▪ The converter switches to + Vdc / 2 when the reference is greater than all the carrier waveforms.

▪ The converter switches to +Vdc / 4 when the reference is less than the uppermost carrier waveform and greater than all other carriers. • The converter switches to 0 when the reference is less than the two uppermost carrier waveform and greater than two lowermost carriers.

▪ The converter switches to - Vdc / 4 when the reference is greater than the lowermost carrier waveform and lesser than all other carriers.

▪ The converter switches to -Vdc / 2 when the reference is lesser than all the carrier waveforms.

III. RESULTS

The performance of ATHPQC in power conditioning is shown in Fig:3.1 and 3.2. ATHPQC starts operating at 0.2s. The power quality problems in co-phase TPSS like unbalanced current and reactive power are solved after ATHPQC starting operation. Results showed that the output voltage of the β-phase converter is nearly twice that of the α-phase converter. However, current at β-phase is much lower than the current at α-phase.

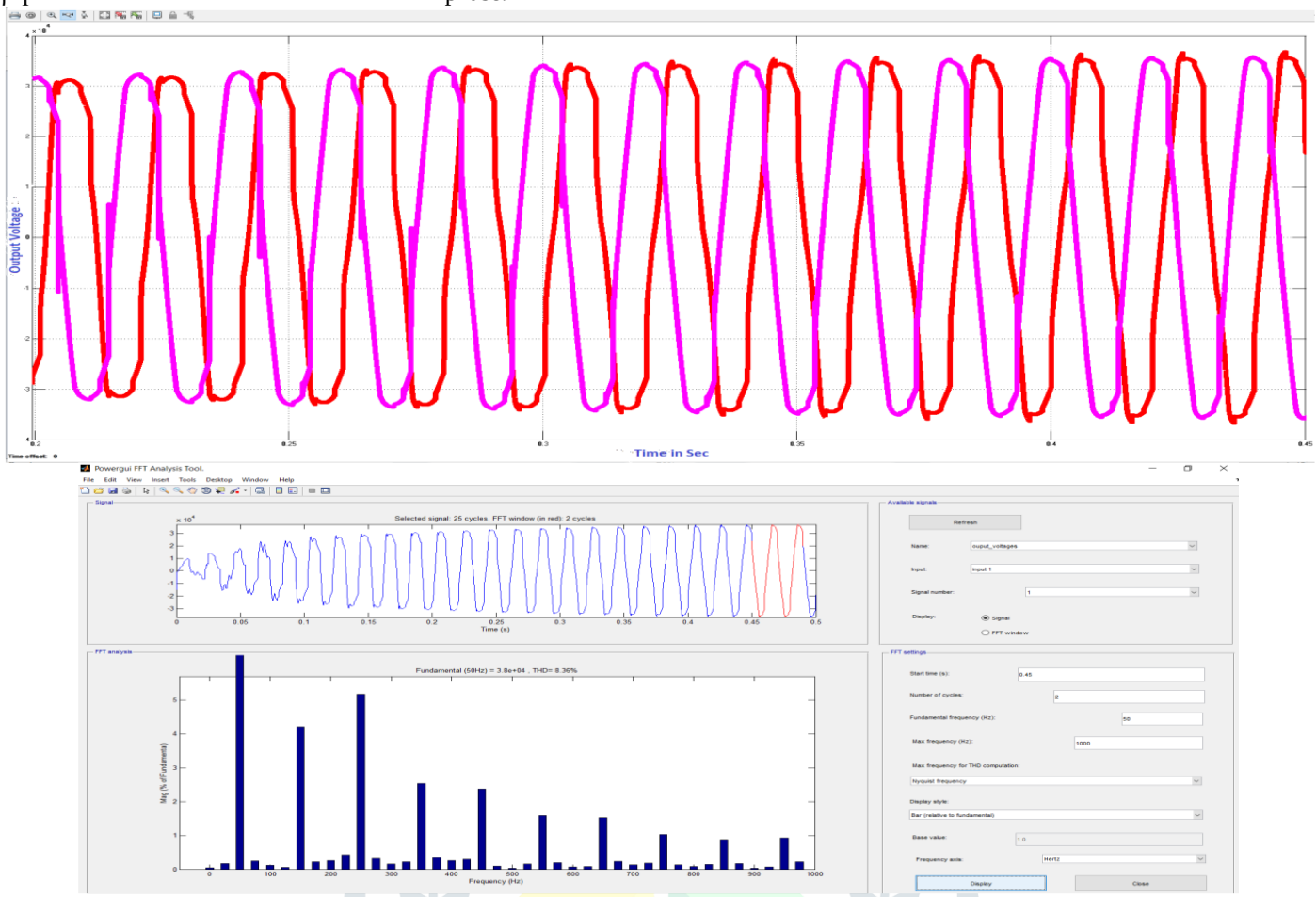

Fig:3.1 Converter Output Voltage

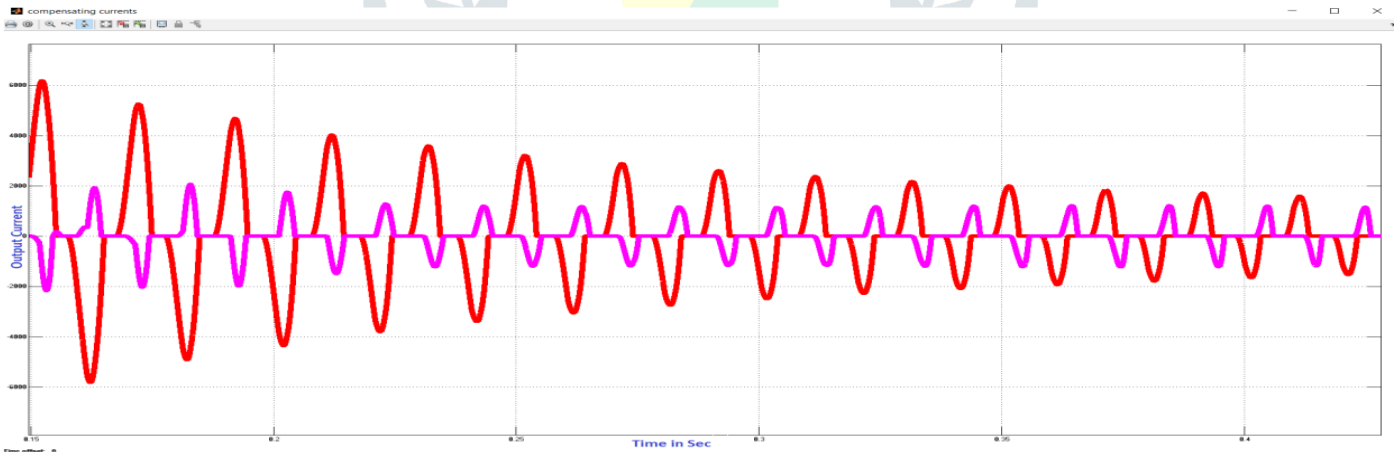

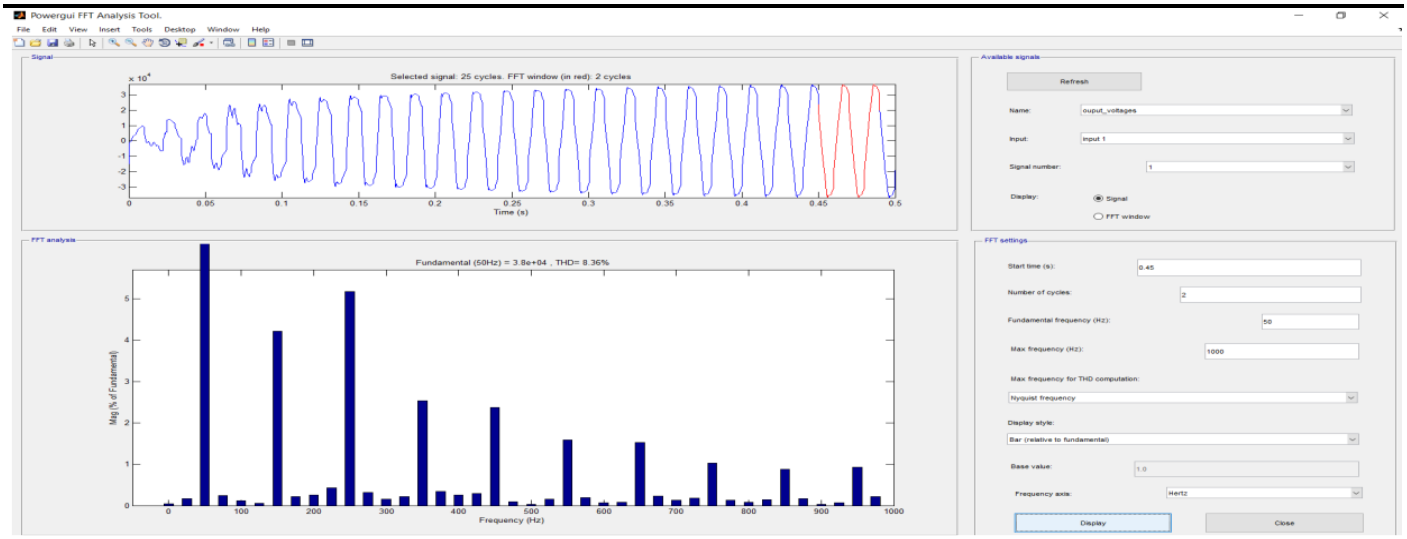

Fig: 3.2 Compensating Currents

The performance of ATHPQC using APOD technique in power conditioning is shown in Fig. 3.3 and 3.4 ATHPQC starts operating at 0.2s. The power quality problems in co-phase TPSS like unbalanced current and reactive power are solved after ATHPQC starting operation. Results showed that the output voltage of the β-phase converter is nearly twice that of the α-phase converter. However, current at β-phase is much lower than the current at α-phase. The results are much better by using the APOD technique, and the number of switches required are also reduced.so that switching loses are reduced. The output results of ATHPQC by using APOD technique have less harmonics and THD compared to ATHPQC by using phase shifted PWM.

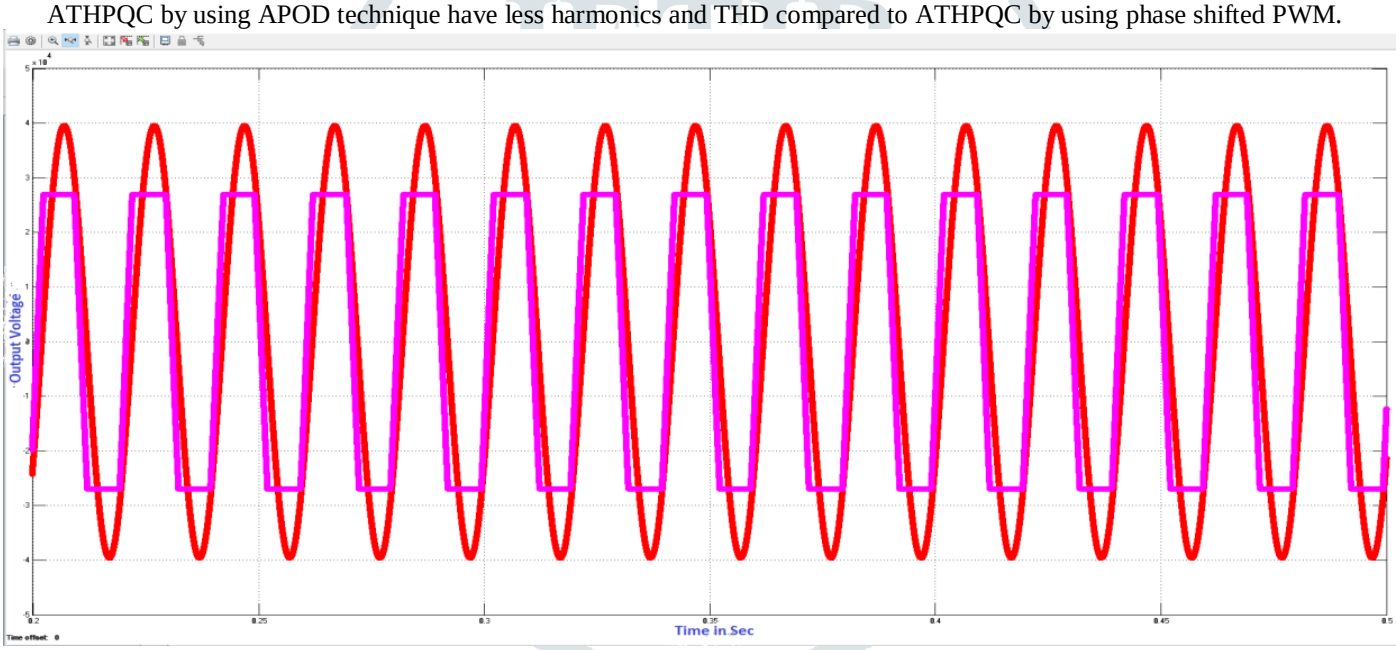

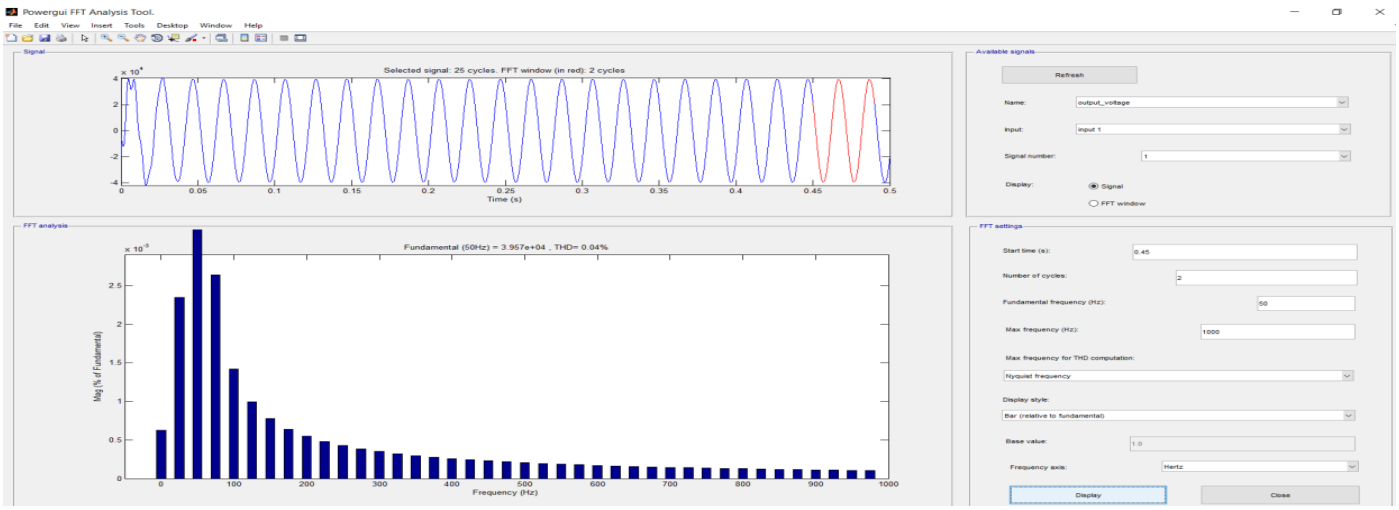

Figure: **3.3 Converter Output Voltage**

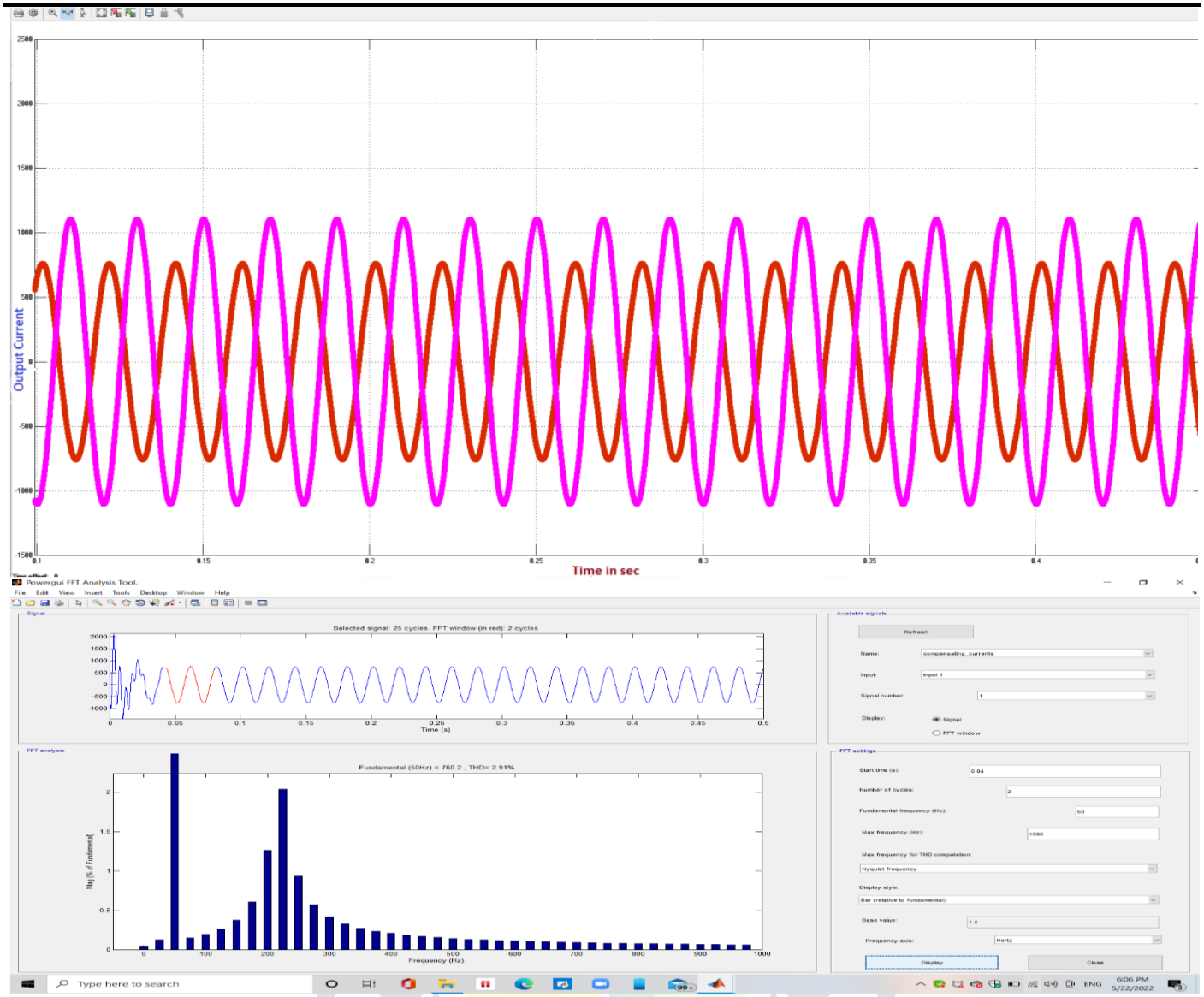

Fig:3.4 Compensating Currents

IV. CONCLUSION

The co-phase traction power supply system employed by Hybrid Power quality Conditioner has been studied, Co-phase traction power supply system employed by Modular Multilevel Converter (MMC) based Asymmetrical Three-leg Hybrid Power Quality Conditioner (ATHPQC)has been developed. The unbalanced currents which are due to the existence of neutral section has been compensated by using ATHPQC, therefore neutral section can be removed. ATHPQC using phase-shifted PWM technique and Alternate Phase Opposition

Disposition PWM technique has been implemented. ATHPQC using APOD PWM technique gives better performance like less THD, less harmonics, high efficiency when compared to the ATHPQC using Phase-Shifted PWM technique

V. FUTURE SCOPE

In future possible to extended with

1. Control technique may replace with fuzzy or Ann controller for reducing power losses and reduced the THD Values.

2. MMI switching topology may change with less number of switches for reducing cost, harmonics and designing complexity.

VI.REFERENCES

[1] P. Arboleya, G. Diaz, and M. Coto, “Unified ac/dc power flow for traction systems: A new concept,” IEEE Trans. Veh. Technol., vol. 61, no. 6, pp. 2421–2430, 2012.

[2] S. Östlund, “Rail Power Supplies Going More Power Electronic [Technology Leaders],” IEEE Electrif. Mag., vol. 2, no. 3, 2014.

[3] S. Zhao, X. Huang, Y. Fang, and J. Zhang, “Compensation of DC-Link voltage fluctuation for railway traction PMSM in multiple low-switching-frequency synchronous space vector modulation modes,” IEEE Trans. Veh. Technol., vol. 67, no. 1, pp. 235–250, 2018.

[4] S Sreelakshmi, M. S. Sujatha, "Novel Hybrid Pulse Width Modulation Technique for Solar Fed Cascaded Multilevel DC-Link Inverter", Helix, the scientific explorer, Vol.10 no. 3, PP.36-41, June 2020.
[5] S .Sreelakshmi, M. S. Sujatha "Mitigation of Harmonics for Eleven-Level Cascaded Multilevel Inverter using SPWM and SHE Techniques", Helix, the scientific explorer, Vol.10 no. 2, pp. 168-177, April 2020.
[6] S .Sreelakshmi, M. S. Sujatha, Jammy Ramesh Rahul, " Multi-level inverter with novel carrier pulse width modulation technique for high voltage applications " , Indonesian Journal of Electrical Engineering and Computer Science Vol. 26, No. 2, May 2022, pp. 667-674.