Induction Motor Protection System Using Fuzzy Logic

Nirav M. Dudhat[1], Dr. Akshay A. Pandya[2], Urvi S. Marathe[3]

[1]Electrical Engineering Department, Birla Vishvakarma Mahavidyalaya, India
[2]Electrical Engineering Department, Birla Vishvakarma Mahavidyalaya, India
[3]Electrical Engineering Department, Birla Vishvakarma Mahavidyalaya, India

Abstract

In this paper the protection of three phase induction motor is simulated using fuzzy logic. Mainly in system there are two types of faults: Mechanical and Electrical. In mechanical faults broken rotor bar, mass unbalance, air gap eccentricity, bearing damage, rotor winding failure, and stator winding failure are there, where as in electrical faults unbalance of voltage or current, single phasing, under voltage, over-voltage, over-current, phase sequence reversal, earth fault, overload are there. Among from them only six faults are taken in this paper, those are over voltage, over current, voltage and current unbalance, low voltage and temperature rise. In the conventional protection system the time delay is predefined for various faults without consideration of fault level. If any temporary failure is detected in system, motor should not stop. Similarly if system waits too long to stop motor in critical faulty condition then it will lead to the serious defect. So it is necessary to set time delay optimally. By fuzzy logic the delay time is computed on the basis of fault level if fault persists even after the delay time then system will send trip signal to motor. In this paper different time delays are computed for various faulty parameters. The time delay is obtained according to rule base..

Keywords: *Fuzzy logic; induction motor; motor protection; Simulink model; artificial intelligence; rules; fuzzy rule base.*

INTRODUCTION

In the time of industrialization, induction motor is the essential part of the industries due to their advantages over other motors like low cost, rugged, low maintenance, reasonably small size, and higher efficiency and also it can be operated with easily available power supply. In home appliances small fractional hp motors are used where in industries it can be up to 10,000 hp according to their applications. In operation induction motor are more reliable but it is more subjected to different types of undesirable conditions, so it is necessary to protect them from different faults for their smooth operation. Mostly, in industries induction motors are more subjected to faults like over voltages, over current, temperature rise, low voltage, voltage unbalance and current unbalance.

The faults can be identified by mechanical and electrical failures, signal processing and artificial intelligence techniques. In conventional methods, mechanical failure was detected by using mathematical models. In this model stator currents, speed, vibration level or winding temperature was considered but this methods were not sufficient for complex and nonlinear faulty conditions which cannot be mathematically modeled. For overcoming these types of problems artificial intelligence methods are very helpful. The human decision-making process can often be implemented in complex systems with more success than conventional control techniques with use of this intelligence method like fuzzy logic.

Artificial intelligence techniques are further classified as artificial neural network, fuzzy logic, genetic algorithm and their hybrids which also known as soft computing techniques. In conventional protection techniques relays are provided with some predefined delay time without considering fault level. While in case of fuzzy logic delay time is calculated as per the faults type and

required steps will be taken in between 0 to 4.5sec rime span. If fault persist even after the delay time then trip signal will be send to motor. In fuzzy control system it is necessary to make fuzzy rule base. It is created on the bases of experience, observation and mathematical equation. If the created

Fuzzy rule base is comprehensive as well as appropriate then outcome will be accurate and precise. In this paper, the delay time is calculated by fuzzy logic when the motor is subjected to any undesirable condition.

CONTROL SYSTEM

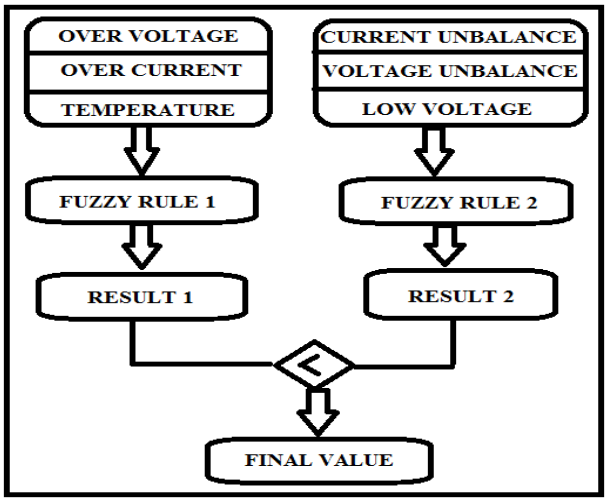

Figure 1 *Fuzzy Control system*

The characteristics of the motor which is used for the proposed system are listed in the Table 1. For preparing the fuzzy rule base required limiting values are listed in Table 2. These limiting values are taken according to the NEMA standard and TS -3205 EN 60034-1 numbered standard of TSI (Turkish Standards Institution).

Table-1 *Motor Parameters*

Three phase 2.2kW induction motor	Voltage : 230V phase to line Speed : 1440 rpm Current : 5.3A Torque : 16 Nm Efficiency : 81%

Table-2 *Limiting Value of motor according to NEMA standard*

Quantity	Min set value	Max set value	Unit
Over Voltage	260	>270	V
Over Current	5.5	>8.4	A
Temperature	135	>155	˚c
Voltage Unbalance	20	>50	V
Current Unbalance	0.5	>2	A
Low Voltage	200	>160	V
Delay Time	0	4.5	sec

Here, in this paper two separate rule bases are created by separating the six different input values for reducing the processing time and size of fuzzy control system just like figure 1. For making of rule base membership functions are required. In the proposed model there are three membership levels are taken those are Low-Medium-High. If inputs are not divided in groups then number of rules will be 3^6

= 729 but by separation it reduced to only 126. Some sample of rule base is listed in the following Table 3 and Table 4. Where NA shows there is no faulty condition in that particular parameter.

Table-3 *1st Rule Base Sample*

Rule No.	Over voltage	Over current	Temperature	Time delay
1	OVL	OCL	TL	VL
2	OVL	OCL	TM	VL
3	OVL	OCM	TH	N
4	OVL	OCH	TL	LN
5	OVM	OCH	TH	VS
6	OVH	OCL	TL	LN
7	OVL	OCM	NA	LN
8	OVL	NA	TL	VL
9	NA	OCL	TL	VL
10	OVL	NA	NA	LN
11	NA	OCM	NA	N

Table- 4 *2nd Rule Base Sample*

Rule No.	Voltage Unbalance	Current Unbalance	Low Voltage	Time Delay
1	VUL	CUL	LVL	VL
2	VUL	CUL	LVM	VL
3	VUL	CUL	LVH	LN
4	VUL	CUM	LVL	VL
5	VUL	CUM	LVM	LN
6	VUL	CUM	LVH	N
7	VUL	CUH	LVL	LN
8	VUM	CUM	NA	N
9	VUL	NA	LVL	VL
10	NA	CUL	LVL	VL
11	VUL	NA	NA	LN

SIMULINK MODEL

The proposed Simulink model used in this paper is shown in the Appendix1. Block function of the Simulink model consists,

Min-Max: This block is used to get maximum and minimum values of input.

Mux: It is multiplexer which takes multiple inputs and gives one output.

Rule Base 1-2: fuzzy logic design is included in this block and also calculate the time value and transfer it to next block.

Display: minimum time will be displayed on it.

Voltage-Current Unbalance: It compares input values and gives highest differences as result. This is done by subtracting three inputs from each other and the highest will be final outcome. Structure of this block is shown in Appendix 2.

Here the figure 2 and 3 shows membership function for over voltage and output time delay. For over voltage there are three membership functions which are Over Voltage Low (OVL), Over Voltage Medium (OVM), and Over Voltage High (OVH). Similarly for output time five membership functions are Very Long (VL), Long (LN), Normal (N), Short (S) and Very Short (VS).

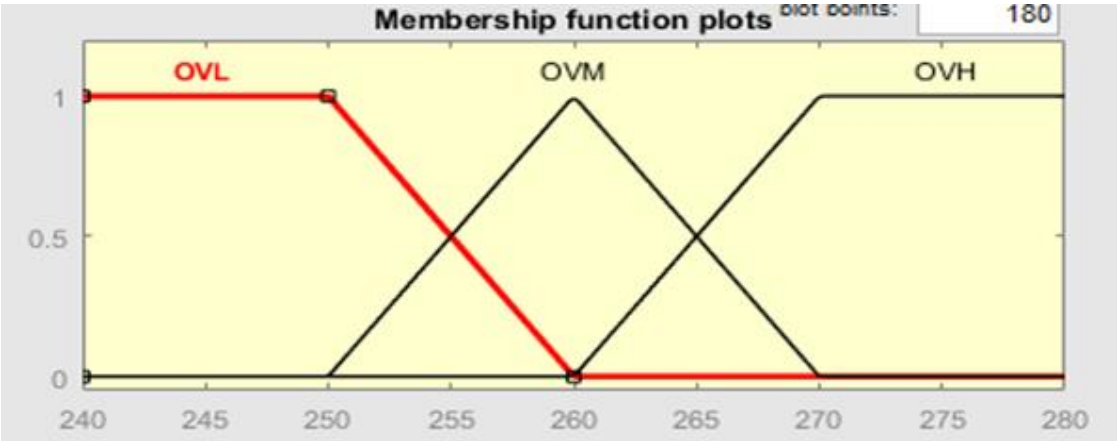

Figure 2 *Membership Function of Over Voltage*

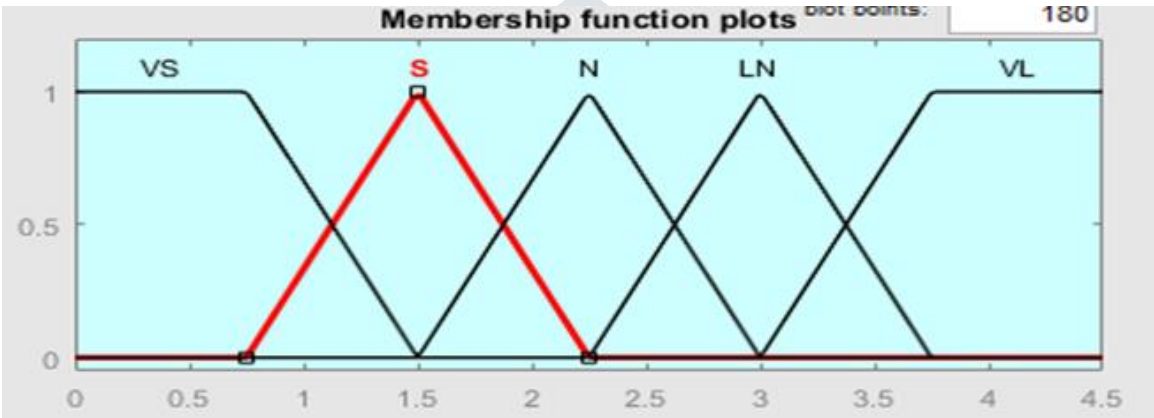

Figure 3 *Membership Function of Output Time*

SIMULINK RESULT

In this study, the fuzzy logic based protection system was implemented for induction motor. The Simulink model was developed for simulating the output delay time for different operating conditions. The input values and rule base have been entered into FIS GUI, fuzzy logic toolbox of MATLAB. Some results obtained from the model for separate rule base are shown in the Table 5 and Table 6.

Table 5 *Result for Rule Base 1*

Rule No.	Over Voltage (V)	Over Current (A)	Temperature (˚c)	Delay Time (s)
1	260.9	8.5	155.2	1.33
2	256.8	8.8	NA	2.26
3	246.6	NA	138.2	3.58
4	NA	8.6	155.5	1.27
5	278.4	NA	NA	2.25
6	NA	NA	153.8	1.65

Table 6 *Result for Rule Base 2*

Rule No.	Voltage Unbalance (V)	Current Unbalance (A)	Low Voltage (V)	Delay Time (s)
1	23.8	0.9	192.5	3.58
2	30.9	1.6	186.2	2.92
3	37.6	1.5	NA	2.45
4	NA	2.6	168.8	1.5
5	NA	NA	182.1	2.71

HARDWARE SIMULATION

THE BLOCK DIAGRAM FOR THE HARDWARE SIMULATION IS SHOWN IN THE APPENDIX 3. THE SAME RESULTS CAN BE OBTAINED WITH THE HARDWARE AND CAN BE COMPARED WITH THE SIMULINK RESULTS.

CONCUSION

In this paper, a fuzzy logic based protection system is used for detecting the faulty operations of three phase induction motor. A Simulink model was implemented for protecting the motor from over voltage, over current, low voltage, current and voltage unbalance and temperature rise. When any error is detected, the system waits for certain time and then stops induction motor if fault is not recovered. In mechanical protection relays, this delay time was adjusted manually but this proposed protection system produces delay time according to fuzzy logic for different degree of various error combinations. So the flexible and optimal delay time is obtained and this methodology is accurate and easy to implement.

Appendix 1

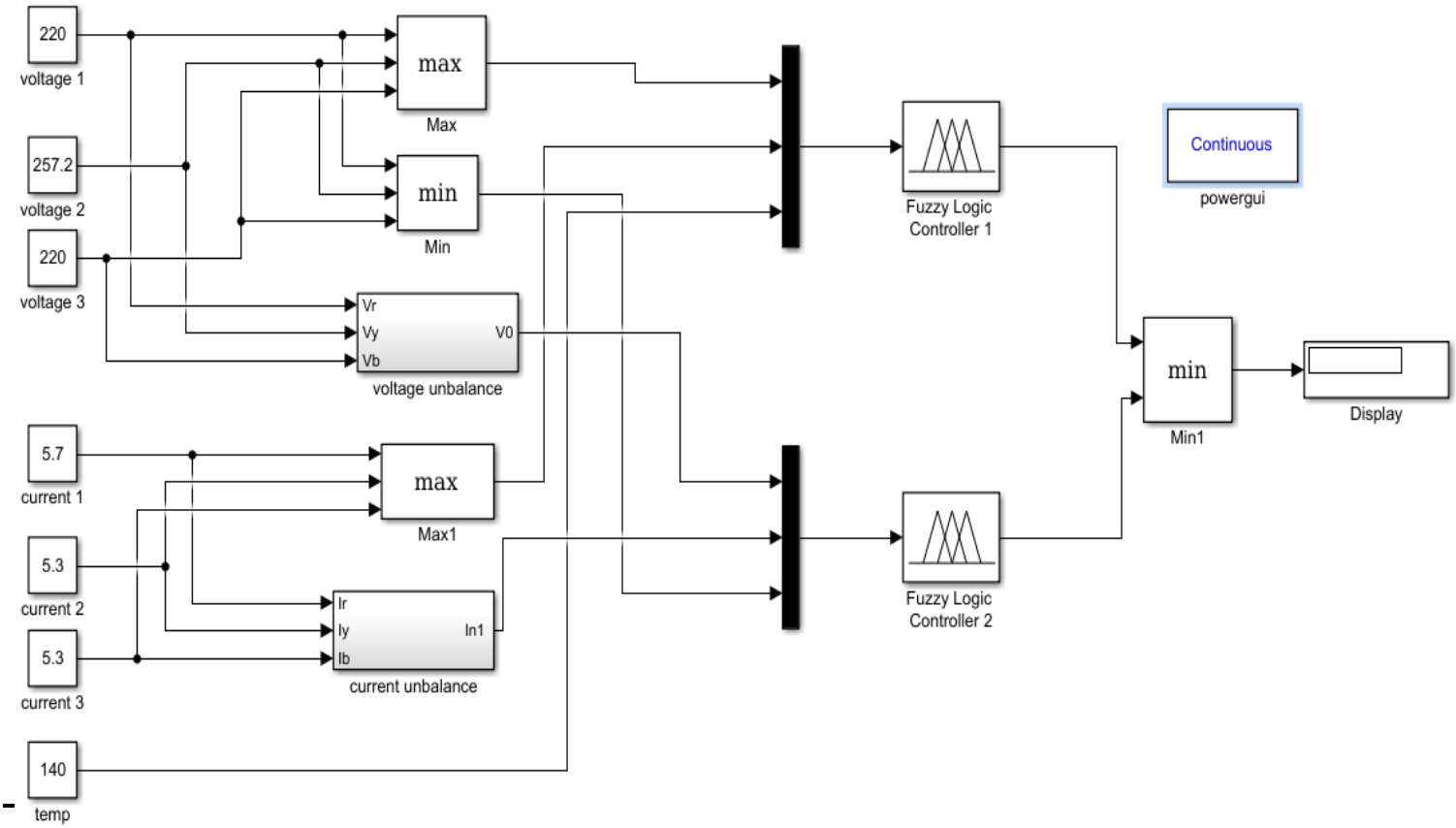

Appendix 2

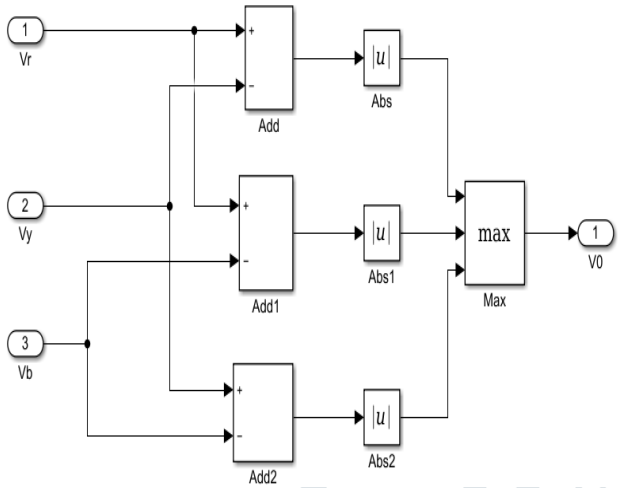

Appendix 3

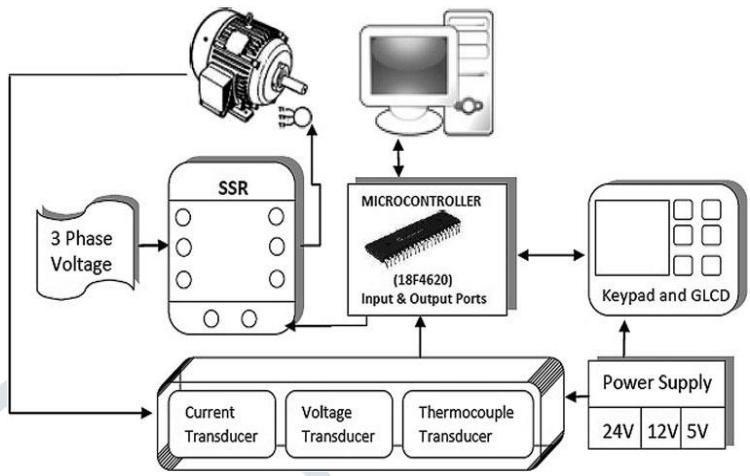

REFERENCES

[1] O. Uyar and M. Çunkaş, 16-18 May 2011. "Design of Fuzzy Logic Based Motor Protection System", In: 6th International Advanced Technologies Symposium (IATS'11), Elazığ, Turkey.
[2] Weidman Qi, a, Jie Xiao, and Youhan Deng, 2015 "Induction Motor Protection System Based On Fuzzy Logic", In: Applied Mechanics and Materials Vols 719-720 (2015) pp 584-589.Trans Tech Publications, Switzerland.
[3] Pedro Vicente Jove Rodríguez, 2008 "Detection of Stator Winding Fault in Induction Motor Using Fuzzy Logic" Elsevier Science.
[4] Priyanka Nath, Jamini Das, Abdur Rohman, Tapan Das, April 6-8, 2016. "A Fuzzy Logic Based Overcurrent Protection System for Induction Motor", In: International Conference on Communication and Signal Processing, India.
[5] Okan Uyar, Mehmet C¸ unkas, 2012. "Fuzzy logic-based induction motor protection system", Springer-Verlag London.
[6] Mr. Chavan Mayur D, Mr. Swami P.S, Dr. Thosar A.G, Mr. Gharase Rajendra B., Dec 2013. "Fault Detection of Induction Motor Using Fuzzy Logic", In: International Journal of Engineering Research & Technology (IJERT). ISSN: 2278-0181.
[7] El Sayed M. Tag Eldin and Nivin Ghamry. "A PIC Microcontroller Based Protection System of Three Phase Induction Motor", International Journal of Soft Computing, 2016.
[8] Akshay P. Dubey, K. Joshi, Y. Singh, Narendra S. Yadav. "Fuzzy Logic Based Fault Protection & Fault Classification System for Induction Motor", Fifth IRAJ International Conference, 15th September 2013, Pune, India.
[9]Neha Yevale, Yogesh karhe, Priyanka Sawant, Akash Tayade, and Prof. P. B. Shelke. "Microcontroller based fault detection and protection of three phase induction motor" International Journal of Research in Advent Technology (IJRAT), April 2016.
[10] M.S. Khireddine, N. Slimane, Y. Abdessemed, and M.T. Makhloufi, "Fault detection and diagnosis in induction motor using artificial intelligence technique" MATEC web of conference, EDP science, 2014.