Basic Optimization of Compressor Frame

[1]Prajakta P. Kachare, [2]Aditya R. Wankhede, [3]Vishal C. Momale
[1]Assistnt Professor,
[1]Mechanical Engineering Department,
[1] Anantrao Pawar College of Engineering and Research, Pune, India

Abstract : Base Frame is a structural assembly consisting of beams of various cross sections and dimensions. The base frame is subjected to gravitational loading of all the components mounted viz. Compressor, Air Receiver vessel etc. The frame discussed in this report was designed with conventional CAD design practices and then analyzed statically with FEA software. The analysis was carried out to determine the induced stresses and the deflections at various locations on proposed frame. The structure was optimized to reduce weight. Mainly frame is designed to mount compressor and other machine component to mount. It must be able to control, similar to shock absorber, the motion resulting from load condition, such as running in start condition. For excitation of small amplitude over the higher frequency range, a compliant but highly damped mount is required for vibration isolation.

***IndexTerms* – FEA analysis, Base Frame, Modal analysis**

I. Introduction

Introduction

Compressor Frame is a structural assembly consisting of beams of various cross sections and dimensions. The sections used may be of equal dimensions and cross sections, or a combination can be used for optimum strength and weight. The sections can be of IS standard dimensions or custom made. Placement of beams is done in such a way that all the footprints of the components are covered. For sufficiently lower values of deflection (< 2.5 mm), and higher value of FOS(> 1.15), the structure was redesigned using thinner and smaller IS standard sections. The repetitive iterations with smaller sections gave final optimum solution. Mainly frame is designed to mount compressor and other machine component to mount. It must be able to control, similar to shock absorber, the motion resulting from load condition, such as running in start condition. For excitation of small amplitude over the higher frequency range, a compliant but highly damped mount is required for vibration isolation.

Objective

The main objective of this project is base frame that will sustains in app operating condition Carry out modal analysis for finding natural frequency and its mode shape to check the resonance condition. Static structural analysis is carried out to deformation of the beam for desired load and vibration condition has to analyze.

Material property

Mild Steel:- The material used is structural stell cold formed welded
Density of frame= 7850 kg/m^3
Modulus of elasticity, E= 200 Gpa
Shear Modulus= 76.923 Gpa
Poisson ration= 0.3
Bulk Modulus, K= 166.7 Gpa

Design Analsys

The Skid frame required to support various components has been designed by conventional design procedure. The weights of the components mounted on the frame were considered as loads for designing. Some simplifying assumptions were made at the initial stages in order to decide the cross sections of various beams. The forces from Footprints were transferred directly to the main structural beams. Shear Force and Bending Moment diagrams were drawn for the beams carrying maximum portions of weights. Flexural equation was used to obtain Moment of Inertia of required section.Formula applied: δmax= ML2 / 8EI For Iteration I, Beams of MB 225 I-section, MCP 225 Channel section of adequate lengths were modeled as CATparts. The beams were assembled to generate a structure, or CATproduct. This was later converted into STEP for analysis.

FEA Model

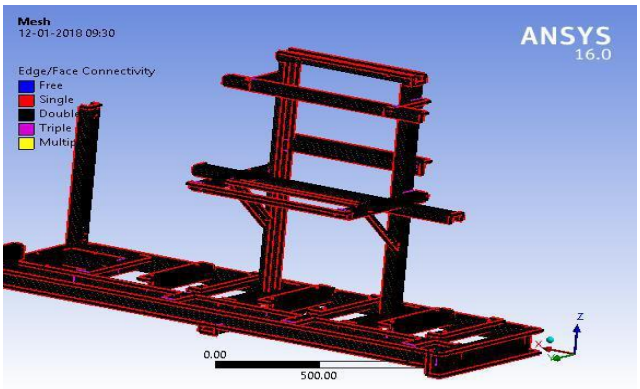

Figure 1. Meshing of Frame

Modal analysis

Modal Analysis determines natural frequencies and mode shapes of a structure. Each natural frequency sets up specific deformation pattern, i.e. mode shape. The same phenomenon can occur in a Skid frame during working condition. To avoid mechanical damage due to Resonance, the structure must undergo Modal Analysis and it should be verified that the frequencies don't lie in the vicinity of the frequency of oscillatory forces being applied by the rotating components in assembly. For Modal Analysis, the model should be kept free from all the loads and constrains. Hence, after Tetrahedral meshing was done, no constrains were applied. First six frequencies were supposed to be zero, as they represent translational and rotational vibrations about X, Y, Z axes. Seventh frequency, or the First Resonant Natural Frequency should be greater than 20 for compressor applications. This is illustrated by following table

The modal analysis is carried out to find natural frequency of base frame up to Four mode shape.

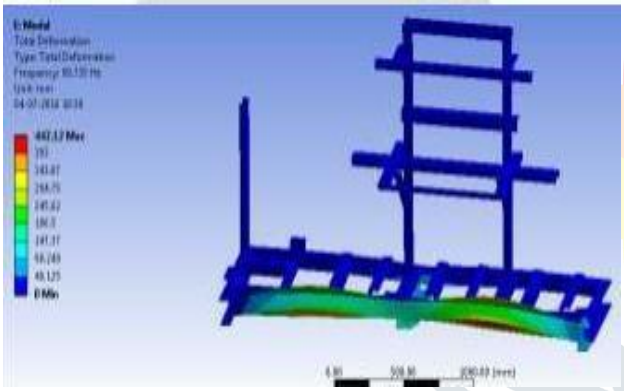

Figure 2. First Mode Shape

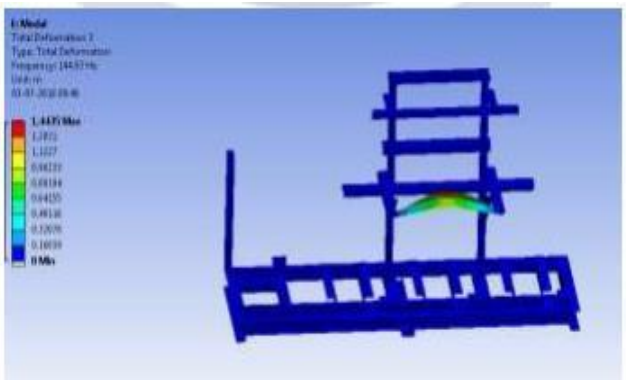

Figure 3. Second Mode Shape

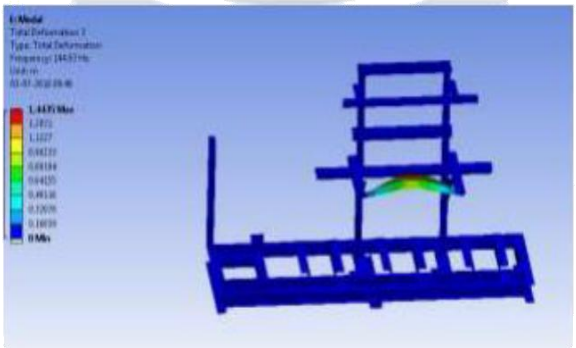

Figure 4. Third Mode Shape

Static structural analysis

The approximate weight of the component which is mounted on the compressor frame is approximate equal to 1140 kg, in addition to load the dynamic load considered is 250 kg.
The frame which is bear 1340 kg is supposed to be design.

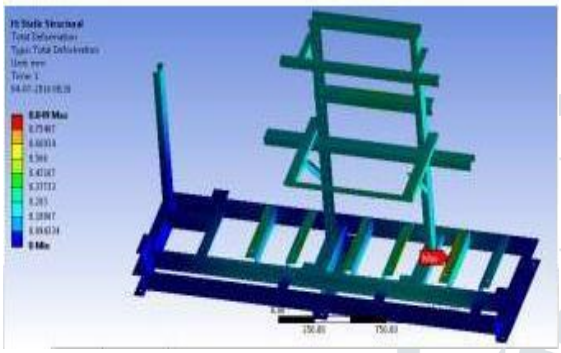

Figure 5. Total deformation

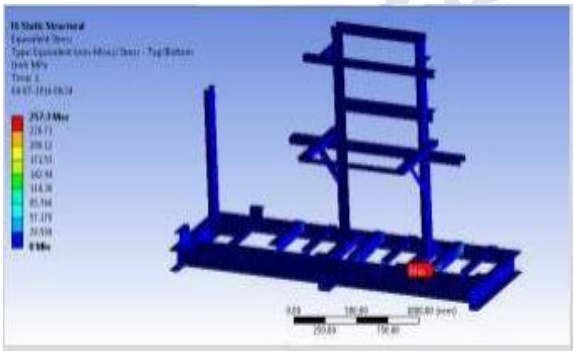

Figure 6. Stress Plot

IV. RESULTS AND DISCUSSION

Table 1. Natural Frequency and Mode shape

Mode	Frequency (Hz)
1	99.335
2	111.38
3	144.93
4	148.25
5	153.15
6	158.11

The maximum stress induced in the frame is 257.3 Mpa and maximum deflection observed is 0.849 mm.
The natural frequency varies from 99.335 Hz to 158.11 Hz. From compressor catalogue, compressor rotate at 1450 R.P.M, which implies that the excitation frequency is 24.66 Hz.

CONCLUSION

The modal analysis is carried out to find natural frequency of base frame up to six mode shape. The natural frequency varies from 99.335 Hz to 158.11 Hz. From compressor catalogue, compressor rotate at 1450 R.P.M, which implies that the excitation frequency is 24.66 Hz.

Therefore our natural frequency is above excitation frequency, the resonance never occurs in the frame. The maximum stress and deformation are with in permissible limit.

REFERENCES

[1]. "Analysis and testing of Skid Frame of Compressor", Joshi A. M., Jadhav T. A.; International Journal of Applied Research and Studies (iJARS) ISSN: 2278-9480 Volume 2, Issue 9 (Sep - 2013)

[2]. "Design and Finite Element Analysis of Base Frame of Power Transmission Unit"; International Journal of Applied Research in Mechanical Engineering, 2361-6250, Vol-2, Iss-2, 2012

[3]. "Dimensions For Hot Rolled Steel Beam, Column, Channel And Angle Sections (Third Revision)"; Indian Standard Organization; November 1996

[4]. "Static and Dynamic Analysis of a 4.5 Ton Truck Chassis"; T. H. Fui, R. A. Rahman; Jurnal Mekanikal, December 2007, No. 24, 56-67

[5]. "Strength of Materials"; M. Ramarutham; Dhanpat Rai Publications; Edition 12; 2012

[6]. "Fundamentals of Finite Element Analysis"; David V. Hutton; McGraw Hill Publication; 2004